MECHANICAL SYMBOLS LIST

DUCTABLE AC UNIT

OUTDOOR UNIT

AIR DEVICES

CEILING DIFFUSER SUPPLY

CEILING DIFFUSER RETURN/EXHAUST

DUCT ACCESSORIES

VD — VOLUME DAMPER W/ ACCESS DOOR

BD — BACKDRAFT DAMPER

M — MOTORIZED DAMPER W/ ACCESS DOOR

CEILING ACCESS PANEL

CONTROLS AND SENSORS

T — THERMOSTAT

T_S — TEMPERATURE SENSOR

DUCTWORK

24"X12" — RECTANGULAR DUCT (WIDTH X DEPTH)

FC FC — FLEXIBLE CONNECTION

Ø12 — FLEXIBLE DUCT

ROUND DUCT CROSS SECTION

SUPPLY AIR RECTANGULAR DUCT GOING UP/DOWN

RETURN AIR RECTANGULAR DUCT GOING UP/DOWN

APPLICABLE CODES

A. 2022 CALIFORNIA BUILDING CODE

B. 2022 CALIFORNIA MECHANICAL CODE

C. 2022 CALIFORNIA PLUMBING CODE

D. 2022 CALIFORNIA FIRE CODE

E. 2022 CALIFORNIA ELECTRICAL CODE

F. 2022 CALIFORNIA ENERGY CODE.

MECHANICAL DRAWING LIST

M0.1	MECHANICAL SYMBOL, ABBREVIATION & NOTES
M0.2	MECHANICAL SPECIFICATIONS
M1.0	MECHANICAL FLOOR PLAN
M2.0	MECHANICAL DETAILS
M2.1	MECHANICAL SCHEDULE
M3.0	TITLE 24 (1 OF 2)
M3.1	TITLE 24 (2 OF 2)

MECHANICAL ABBREVIATIONS

AC	AIR CONDITIONING UNIT
ACCU	AIR COOLED CONDENSER UNIT
AFF	ABOVE FINISHED FLOOR
AL	ACOUSTIC LINING
BD	GRAVITY DAMPER
CD	CONDENSATE DRAIN
CDR	CEILING DIFFUSER RETURN
CDS	CEILING DIFFUSER SUPPLY
CFM	CUBIC FEET OF AIR PER MINUTE
DN	DOWN
E	EXISTING
EER	ENERGY EFFICIENCY RATIO
EF	EXHAUST FAN
FC	FLEXIBLE CONNECTION
FD/AD	FIRE DAMPER W/ACCESS DOOR
FD	FIRE DAMPER W/FUSIBLE LINK
FSD	FIRE SMOKE DAMPER
IEER	INTEGRATED ENERGY EFFICIENCY RATIO
MD	MOTORIZED DAMPER
N	NEW
RA	RETURN AIR
RAD	RETURN AIR DUCT
SA	SUPPLY AIR
SAD	SUPPLY AIR DUCT
SEER	SEASONAL ENERGY EFFICIENCY RATIO
VD	VOLUME CONTROL DAMPER

FIELD VERIFY ALL CONDITIONS

DESIGN DRAWINGS ARE SCHEMATIC. THIS CONTRACTOR SHALL VISIT THE SITE PRIOR TO BIDDING OR AWARD OF CONTRACT TO INSPECT EXISTING FIELD CONDITIONS. THIS CONTRACT SHALL INCLUDE ALL LABOR AND MATERIALS NECESSARY FOR FIELD MODIFICATIONS DUE TO EXISTING CONDITIONS. THE CONTRACTOR SHALL CONTACT THE ARCHITECT, ENGINEER OR OWNER PRIOR TO BIDDING FOR INTERPRETATIONS AND CLARIFICATIONS OF THE DESIGN AND INCLUDE IN HIS BID ALL COSTS TO MEET THE DESIGN INTENT CLARIFICATIONS MADE BY THE ARCHITECT, ENGINEER OR OWNER AFTER BIDDING WILL BE FINAL AND SHALL BE IMPLEMENTED AT CONTRACTORS COST. BIDDING CONTRACTORS SHALL HAVE A WORKING KNOWLEDGE OF LOCAL CODES AND ORDINANCES AND SHALL INCLUDE IN THEIR BIDS THE COSTS FOR ALL WORK INSTALLED IN STRICT ACCORDANCE WITH GOVERNING CODES, THE PLANS AND SPECIFICATIONS NOT WITHSTANDING THE CONTRACTOR SHALL ALERT ARCHITECT, ENGINEER OR OWNER OF ANY APPARENT DISCREPANCIES BETWEEN GOVERNING CODES AND DESIGN INTENT.

BUILDING DEPARTMENT NOTES

ALL WORK SHALL COMPLY WITH APPLICABLE SECTIONS OF THE CALIFORNIA BUILDING CODE 2022, AND ALL AMENDMENTS AND RULES AND REGULATIONS OF THE DEPARTMENT OF BUILDINGS TO DATE.

1. ALL HEATING AND COOLING LOADS CALCULATED PER ASHRAE/ACCA 183.
2. VENTILATION FOR ALL AREA SHALL COMPLY WITH CALIFORNIA ENERGY CODE 2022, SECTION 120.1-REQUIREMENTS FOR VENTILATION AND INDOOR AIR QUALITY.
3. MINIMUM TEMPERATURE TO BE MAINTAINED IN OCCUPIED SPACES DURING HEATING SEASON: 68 DEG. FAHRENHEIT.
4. A STATEMENT SHALL BE FILED BY THE OWNER OR TENANT IN POSSESSION THAT THE VENTILATION SYSTEM WILL BE KEPT IN CONTINUOUS OPERATION AT ALL TIMES DURING THE NORMAL OCCUPANCY OF THE STRUCTURE.
5. REFER TO ARCHITECTURAL DRAWINGS FOR REQUIRED FIRE-RATED WALL AND SMOKE WALL CONSTRUCTION AND LOCATION.
6. THESE PLANS ARE APPROVED ONLY FOR THE WORK INDICATED ON THE APPLICATION SPECIFICATION SHEET. ALL OTHER MATTERS SHOWN ARE NOT TO BE RELIED UPON OR TO BE CONSIDERED AS EITHER BEING APPROVED OR IN ACCORDANCE WITH APPLICABLE CODES.
7. TESTS OF MECHANICAL SYSTEMS SHALL BE PERFORMED IN ACCORDANCE WITH THE FOLLOWING SECTIONS OF THE CALIFORNIA MECHANICAL CODE 2022:
   A. VENTILATION SYSTEM BALANCING CALIFORNIA MECHANICAL CODE 2022 - 402
   B. SMOKE CONTROL SYSTEMS - CALIFORNIA MECHANICAL CODE 2022 - 606
9. THE FOLLOWING WORK ITEMS, COMPONENTS, MATERIALS, CAPACITIES, ETC. SHALL COMPLY WITH THE REFERENCED CODE OR STANDARD:
   A. STANDARDS OF HEATING - CALIFORNIA BUILDING CODE 2022 - 1203
   B. DUCT CONSTRUCTION AND INSTALLATION- CALIFORNIA MECHANICAL CODE 2022 - 603
   C. AIR INTAKES, EXHAUSTS AND RELIEF - CALIFORNIA MECHANICAL CODE 2022 -502.
   D. AIR FILTERS - CALIFORNIA MECHANICAL CODE 2022 - 401 (FILTERS SHALL BE A MINIMUM OF MERV 13 AS REQUIRED BY CENC 120.1(C))
   E. MANUAL AND AUTOMATIC FIRE AND SMOKE CONTROLS FOR AIR DISTRIBUTION SYSTEMS - CALIFORNIA MECHANICAL CODE 2022 - 606
10. PORTIONS OF SUPPLY-AIR AND RETURN-AIR DUCTS CONVEYING HEATED OR COOLED AIR LOCATED IN ONE OR MORE OF THE FOLLOWING SPACES SHELL BE INSULATED TO A MINIMUM INSTALLED LEVEL OF R-8:
   A. OUTDOOR; OR
   B. IN A SPACE BETWEEN THE ROOF AND AN INSULATED CEILING; OR
   C. IN A SPACE DIRECTLY UNDER A ROOF WITH FIXED VENTS OR OPENING TO THE OUTSIDE OR UNCONDITIONED SPACE ; OR
   D. IN AN UNCONDITIONED CRAWLSPACE ; OR
   E. IN OTHER UNCONDITIONED SPACES.
11. OPERATION AND CONTROL REQUIREMENTS FOR MINIMUM QUANTITIES OF OUTDOOR AIR. TIMES OF OCCUPANCY - THE MINIMUM RATE OF OUTDOOR AIR REQUIRED BY SECTION 120.1(C) SHALL BE SUPPLIED TO EACH SPACE AT ALL TIMES WHEN THE SPACE IS USUALLY OCCUPIED.
12. ALL MECHANICAL EQUIPMENT SHALL BE TESTED BY A CALIFORNIA CERTIFIED ACCEPTANCE TEST TECHNICIAN.

THERMOSTATIC CONTROL NOTES

THERMOSTATIC CONTROLS

THE SUPPLY OF HEATING AND COOLING ENERGY TO EACH ZONE SHALL BE CONTROLLED BY INDIVIDUAL THERMOSTATIC CONTROLS CAPABLE OF RESPONDING TO TEMPERATURE WITHIN THE ZONE. WHERE HUMIDIFICATION OR DEHUMIDIFICATION OR BOTH IS PROVIDED, NOT FEWER THAN ONE HUMIDITY CONTROL DEVICE SHALL BE PROVIDED FOR EACH HUMIDITY CONTROL SYSTEM.

DEADBAND

WHERE USED TO CONTROL BOTH HEATING AND COOLING, ZONE THERMOSTATIC CONTROLS SHALL BE CONFIGURED TO PROVIDE A TEMPERATURE RANGE OR DEADBAND OF NOT LESS THAN 5°F (2.8°C) WITHIN WHICH THE SUPPLY OF HEATING AND COOLING ENERGY TO THE ZONE IS SHUT OFF OR REDUCED TO A MINIMUM.

SETPOINT OVERLAP RESTRICTION

WHERE A ZONE HAS A SEPARATE HEATING AND A SEPARATE COOLING THERMOSTATIC CONTROL LOCATED WITHIN THE ZONE, A LIMIT SWITCH, MECHANICAL STOP OR DIRECT DIGITAL CONTROL SYSTEM WITH SOFTWARE PROGRAMMING SHALL BE CONFIGURED TO PREVENT THE HEATING SETPOINT FROM EXCEEDING THE COOLING SETPOINT AND TO MAINTAIN A DEADBAND IN ACCORDANCE WITH SECTION C403.4.1.2.

OFF-HOUR CONTROLS

EACH ZONE SHALL BE PROVIDED WITH THERMOSTATIC SETBACK CONTROLS THAT ARE CONTROLLED BY EITHER AN AUTOMATIC TIME CLOCK OR PROGRAMMABLE CONTROL SYSTEM.

THERMOSTATIC SETBACK

THERMOSTATIC SETBACK CONTROLS SHALL BE CONFIGURED TO SET BACK OR TEMPORARILY OPERATE THE SYSTEM TO MAINTAIN ZONE TEMPERATURES DOWN TO 55°F (13°C) OR UP TO 85°F (29°C).

AUTOMATIC SETBACK AND SHUTDOWN

AUTOMATIC TIME CLOCK OR PROGRAMMABLE CONTROLS SHALL BE CAPABLE OF STARTING AND STOPPING THE SYSTEM FOR SEVEN DIFFERENT DAILY SCHEDULES PER WEEK AND RETAINING THEIR PROGRAMMING AND TIME SETTING DURING A LOSS OF POWER FOR NOT FEWER THAN 10 HOURS. ADDITIONALLY, THE CONTROLS SHALL HAVE A MANUAL OVERRIDE THAT ALLOWS TEMPORARY OPERATION OF THE SYSTEM FOR UP TO 2 HOURS; A MANUALLY OPERATED TIMER CONFIGURED TO OPERATE THE SYSTEM FOR UP TO 2 HOURS; OR AN OCCUPANCY SENSOR.

AUTOMATIC START AND STOP

AUTOMATIC START AND STOP CONTROLS SHALL BE PROVIDED FOR EACH HVAC SYSTEM. THE AUTOMATIC START CONTROLS SHALL BE CONFIGURED TO AUTOMATICALLY ADJUST THE DAILY START TIME OF THE HVAC SYSTEM IN ORDER TO BRING EACH SPACE TO THE DESIRED OCCUPIED TEMPERATURE IMMEDIATELY PRIOR TO SCHEDULED OCCUPANCY. AUTOMATIC STOP CONTROLS SHALL BE PROVIDED FOR EACH HVAC SYSTEM WITH DIRECT DIGITAL CONTROL OF INDIVIDUAL ZONES. THE AUTOMATIC STOP CONTROLS SHALL BE CONFIGURED TO REDUCE THE HVAC SYSTEM'S HEATING TEMPERATURE SETPOINT AND INCREASE THE COOLING TEMPERATURE SETPOINT BY NOT LESS THAN 2°F (1.11°C) BEFORE SCHEDULED UNOCCUPIED PERIODS BASED ON THE THERMAL LAG AND ACCEPTABLE DRIFT IN SPACE TEMPERATURE THAT IS WITHIN COMFORT LIMITS.

GENERAL NOTES

1. CONTRACTOR SHALL SURVEY THE AREA OF THIS WORK BEFORE SUBMITTING A BID AND SHALL BE RESPONSIBLE FOR NOTIFYING THE ARCHITECT OF ANY CONDITIONS WHICH WOULD PREVENT THE INSTALLATION OF THE WORK AS SHOWN ON DRAWINGS.
2. ALL APPLICABLE CODES, LAWS AND REGULATIONS GOVERNING OR RELATING TO ANY PORTION OF THIS WORK ARE HEREBY INCORPORATED INTO AND MADE A PART OF THESE SPECIFICATIONS, AND THEIR PROVISIONS SHALL BE CARRIED OUT BY THE CONTRACTOR WHO SHALL INFORM THE OWNER, PRIOR TO SUBMITTING A PROPOSAL, OF ANY WORK OR MATERIALS WHICH VIOLATE ANY OF THE ABOVE LAWS AND REGULATIONS. ANY WORK DONE BY THE CONTRACTOR CAUSING SUCH VIOLATION SHALL BE CORRECTED BY THE CONTRACTOR.
3. BEFORE PROCEEDING WITH ANY WORK IN OCCUPIED OR USED AREAS, THE CONTRACTOR SHALL APPLY TO OWNER FOR PERMISSION TO ENTER SUCH AREAS. THE CONTRACTOR IS OBLIGED TO PERFORM HIS WORK ONLY AT THE TIMES DESIGNATED BY OWNER. THERE WILL BE NO ADDITIONAL COMPENSATION FOR THE WORK PERFORMED AFTER HOURS OR ON OFF-DAYS WITHOUT PRIOR WRITTEN APPROVAL.
4. THE WORK IN THE BUILDING SHALL BE DONE WHEN AND AS DIRECTED, AND IN A MANNER SATISFACTORY TO THE OWNER. THE WORK SHALL BE PERFORMED SO AS TO CAUSE THE LEAST POSSIBLE INCONVENIENCE AND DISTURBANCE TO THE PRESENT OCCUPANTS.
5. THE CONTRACTOR'S PROPOSAL FOR ALL WORK SHALL BE PREDICATED ON THE PERFORMANCE OF THE WORK DURING REGULAR WORKING HOURS. WHEN SO DIRECTED, HOWEVER, THE CONTRACTOR SHALL INSTALL WORK IN OVERTIME AND THE ADDITIONAL COST TO BE CHARGED THEREFORE SHALL BE ONLY THE "PREMIUM" PORTION OF THE WAGES PAID.
6. CONTRACTOR SHALL ASCERTAIN THE APPROPRIATE METHOD FOR BRINGING THE UNITS INTO AND THROUGH THE BUILDING TO POSITION UNIT IN LOCATION SHOWN ON THE PLANS. WHERE NECESSARY, EQUIPMENT SHALL BE SHIPPED FROM MANUFACTURER IN SECTIONS OF SIZE SUITABLE FOR MOVING THROUGH RESTRICTIVE SPACES. COORDINATE WITH BUILDING OWNER APPROPRIATE TIMES OF DAY SUCH EQUIPMENT MAY BE MOVED THROUGH ALL AREAS.
7. DUCTWORK AND PIPING IS SHOWN DIAGRAMMATICALLY AND DOES NOT SHOW ALL OFFSETS, DROPS AND RISES OF RUNS. THE CONTRACTOR SHALL MAKE ALLOWANCE IN PRICING FOR ROUTING OF DUCTWORK AND PIPING TO AVOID OBSTRUCTIONS. EXACT LOCATIONS ARE SUBJECT TO APPROVAL OF ARCHITECT. COORDINATION WITH THE OTHER TRADES IS REQUIRED.
8. SUPPORT ALL DUCTWORK AND PIPING FROM BUILDING STRUCTURE AND/OR FRAMING IN AN APPROVED MANNER. WHERE OVERHEAD CONSTRUCTION DOES NOT PERMIT FASTENING OR SUPPORTS FOR EQUIPMENT, FURNISH ADDITIONAL FRAMING. INSERTS SHALL BE STEEL, SLOTTED TYPE AND FACTORY PAINTED. SINGLE ROD SHALL BE SIMILAR TO GRINNELL FIG. 281. MULTI-ROD SHALL BE SIMILAR TO FEE & MASON SERIES 9000 WITH END CAPS AND CLOSURE STRIPS. MAXIMUM LOADING INCLUDING PIPES, DUCTWORK CONTENTS AND COVERING SHALL NOT EXCEED 75% OF RATED INSERT CAPABILITY. WHEN SUPPORTING FROM BUILDING USE BEAM CLAMPS IN APPROVED MANNER.
9. PROVIDE ALL NECESSARY FLASHING AND COUNTER FLASHING TO MAINTAIN THE WATERPROOFING INTEGRITY OF THIS BUILDING AS REQUIRED BY THE INSTALLATION OR REMOVAL OF PIPES, DUCTS, LOUVERS, CONDUIT, AND EQUIPMENT. PROVIDE EQUIPMENT CURBS AND DUNNAGE STEEL AS REQUIRED.
10. SEAL OPENINGS AROUND DUCTS AND PIPING THROUGH PARTITIONS, WALLS AND FLOORS (NOT IN SHAFTS) WITH MINERAL WOOL OR OTHER NONCOMBUSTIBLE MATERIAL (FIBERGLASS INSULATION IS NOT ACCEPTABLE).
11. WHERE PENETRATIONS THROUGH FIRE RATED WALLS ARE NOT FIRE PROOFED THIS CONTRACTOR SHALL BE RESPONSIBLE TO SEAL SAME TO MAINTAIN THE RATED INTEGRITY.
12. INSTALL WORK SO AS TO BE READILY ACCESSIBLE FOR OPERATION, MAINTENANCE AND REPAIR. MINOR DEVIATIONS FROM DRAWINGS MAY BE MADE TO ACCOMPLISH THIS, BUT CHANGES WHICH INVOLVE EXTRA COST SHALL NOT BE MADE WITHOUT APPROVAL.
13. ACCESS DOORS ARE REQUIRED FOR ALL BUILDING SERVICE VALVES THAT RUN THROUGH THE SPACE, AND ACCESS DOOR SHALL HAVE THE EQUAL RATED CAPACITY (1HR, 2HR, ETC.) AS WALL. COORDINATE ALL LOCATIONS OF ACCESS DOORS WITH THE ARCHITECT.
14. REMOVABLE ACCESS TILE AND/OR ACCESS DOOR ARE REQUIRED IN HUNG CEILINGS, SHAFTS AND WALLS FOR ALL VOLUME AND FIRE DAMPERS, AUTOMATIC DAMPERS AND ALL OTHER MECHANICAL EQUIPMENT AND DEVICES. HVAC CONTRACTOR TO FURNISH ACCESS LOCATION REQUIREMENTS TO GENERAL CONTRACTOR. ACCESS TILE IDENTIFICATION: PROVIDE BUTTONS, TABS, AND MARKERS TO IDENTIFY LOCATION OF CONCEALED VALVES, DAMPERS AND EQUIPMENT.
15. THE CONTRACTOR SHALL KEEP ALL EQUIPMENT AND MATERIALS, AND ALL PARTS OF THE BUILDING, EXTERIOR SPACES AND ADJACENT STREETS, SIDEWALKS AND PAVEMENTS, FREE FROM MATERIAL AND DEBRIS RESULTING FROM THE EXECUTION OF THIS WORK. EXCESS MATERIALS WILL NOT BE PERMITTED TO ACCUMULATE EITHER ON THE INTERIOR OR THE EXTERIOR.
16. MATERIALS AND WORKMANSHIP, UNLESS OTHERWISE NOTED, SHALL BE IN ACCORDANCE WITH BUILDING STANDARDS.
17. ALL EQUIPMENT SHALL BE PROVIDED WITH ONE YEAR WARRANTY PARTS AND LABOR AND FIVE YEARS ON COMPRESSORS. WARRANTY PERIOD BEGINS UPON PROJECT ACCEPTANCE
18. ALL MATERIAL AND EQUIPMENT TO BE NEW UNLESS OTHERWISE NOTED AND SHALL BE IN ACCORDANCE WITH BUILDING STANDARDS.
19. THE CONTRACTOR SHALL BE RESPONSIBLE FOR HIS WORK WITH ITS COMPLETION AND FINAL ACCEPTANCE AND SHALL REPLACE ANY OF THE SAME WHICH MAY BE DAMAGED, LOST, OR STOLEN WITHOUT ADDITIONAL COST TO THE OWNER.
20. THE CONTRACTOR SHALL BE RESPONSIBLE FOR THE FAILURE OF ANY DUCTWORK SYSTEM OR EQUIPMENT TO FUNCTION PROPERLY UPON COMPLETION OF HIS WORK UPON SAID SYSTEM OR EQUIPMENT.
21. SUBMIT SHOP DRAWING OF ALL WORK WHICH MUST BE APPROVED BY THE ARCHITECT AND ENGINEER BEFORE WORK COMMENCES.
22. INSURANCE: IN ACCORDANCE WITH BUILDING REQUIREMENTS THE CONTRACTOR SHALL INCLUDE A HOLD HARMLESS CLAUSE FOR OWNER AND ENGINEER.
23. THE FINAL ACCEPTANCE WILL BE MADE AFTER THE CONTRACTOR HAS ADJUSTED HIS EQUIPMENT, BALANCED THE VARIOUS SYSTEMS, DEMONSTRATED THAT IT FULFILLS THE REQUIREMENTS OF THE DRAWINGS AND SPECIFICATIONS AND HAS FURNISHED ALL THE REQUIRED CERTIFICATES OF INSPECTION AND APPROVAL.
24. SPECIFICATIONS ARE OF SIMPLIFIED FORM AND INCLUDE INCOMPLETE SENTENCES. WORDS OR PHRASES SUCH AS "THE CONTRACTOR SHALL," "SHALL BE," "FURNISH," "PROVIDE," "A," "THE," AND "ALL" HAVE BEEN OMITTED FOR BREVITY.
25. WHERE A CONFLICT EXISTS BETWEEN THE DRAWINGS, THE SPECIFICATIONS OR ANY OTHER CONSTRUCTION DOCUMENT, THE ONE WITH THE MOST STRINGENT REQUIREMENT(S) SHALL APPLY.

DEFINITIONS:

1) "PROVIDE": TO SUPPLY, INSTALL AND CONNECT UP COMPLETE AND READY FOR SAFE AND REGULAR OPERATION THE PARTICULAR WORK REFERRED TO UNLESS SPECIFICALLY OTHERWISE NOTED.
2) "INSTALL": TO ERECT, MOUNT AND CONNECT COMPLETE WITH RELATED ACCESSORIES.
3) "FURNISH" OR "SUPPLY": TO PURCHASE, PROCURE, ACQUIRE AND DELIVER COMPLETE WITH RELATED ACCESSORIES.

GENERAL HVAC NOTES

1. PROVIDE ALL MATERIAL AND EQUIPMENT AND PERFORM ALL LABOR REQUIRED TO INSTALL COMPLETE AND OPERABLE MECHANICAL SYSTEMS AS INDICATED ON THE DRAWINGS, AS SPECIFIED AND AS REQUIRED BY CODE.
2. CONTRACT DOCUMENT DRAWINGS FOR MECHANICAL WORK (HVAC, PLUMBING, AND FIRE PROTECTION) ARE DIAGRAMMATIC AND ARE INTENDED TO CONVEY SCOPE AND GENERAL ARRANGEMENT ONLY.
3. THE LOCATIONS OF ALL ITEMS SHOWN ON THE DRAWINGS OR CALLED FOR IN THE SPECIFICATIONS THAT ARE NOT FIXED BY DIMENSIONS ARE APPROXIMATE ONLY. THE EXACT LOCATIONS NECESSARY TO SECURE THE BEST CONDITIONS AND RESULTS MUST BE DETERMINED BY THE PROJECT SITE CONDITIONS AND SHALL HAVE THE APPROVAL OF THE ENGINEER BEFORE BEING INSTALLED. DO NOT SCALE DRAWINGS.
4. WHEN MECHANICAL WORK (HVAC, PLUMBING, SHEET METAL, FIRE PROTECTION, ETC.) IS SUBCONTRACTED, IT SHALL BE THE MECHANICAL CONTRACTOR'S RESPONSIBILITY TO COORDINATE SUBCONTRACTORS AND THE ASSOCIATED CONTRACTS. WHEN DISCREPANCIES ARISE PERTAINING TO WHICH CONTRACTOR PROVIDES A PARTICULAR ITEM OF THE MECHANICAL CONTRACT OR WHICH CONTRACTOR PROVIDES FINAL CONNECTIONS FOR A PARTICULAR ITEM OF THE MECHANICAL CONTRACT, IT SHALL BE BROUGHT TO THE ATTENTION OF THE MECHANICAL CONTRACTOR, WHOSE DECISION SHALL BE FINAL.
5. COORDINATE CONSTRUCTION OF ALL MECHANICAL WORK WITH ARCHITECTURAL, STRUCTURAL, CIVIL, ELECTRICAL WORK, ETC., SHOWN ON OTHER CONTRACT DOCUMENT DRAWINGS.
6. INSTALL ALL MECHANICAL EQUIPMENT AND APPURTENANCES IN ACCORDANCE WITH MANUFACTURER'S RECOMMENDATIONS, CONTRACT DOCUMENTS, AND APPLICABLE CODES AND REGULATIONS.
7. WHERE TWO OR MORE ITEMS OF THE SAME TYPE OF EQUIPMENT ARE REQUIRED, THE PRODUCT OF ONE MANUFACTURER SHALL BE USED.
8. COORDINATE ALL EQUIPMENT CONNECTIONS WITH MANUFACTURERS' CERTIFIED DRAWINGS. COORDINATE AND PROVIDE ALL DUCT AND PIPING TRANSITIONS REQUIRED FOR FINAL EQUIPMENT CONNECTIONS TO FURNISHED EQUIPMENT. FIELD VERIFY AND COORDINATE ALL DUCT AND PIPING DIMENSIONS BEFORE FABRICATION.
9. ALL CONTROL WIRE AND CONDUIT SHALL COMPLY WITH THE NATIONAL ELECTRIC CODE AND ELECTRICAL DIVISION OF THE SPECIFICATION.
10. PROVIDE VIBRATION ISOLATION FOR ALL MECHANICAL EQUIPMENT TO PREVENT TRANSMISSION OF VIBRATION TO BUILDING STRUCTURE.
11. LOCATE ALL TEMPERATURE, PRESSURE, AND FLOW MEASURING DEVICES IN ACCESSIBLE LOCATIONS WITH THE STRAIGHT SECTION OF PIPE OR DUCT UP- AND DOWNSTREAM AS RECOMMENDED BY THE MANUFACTURER FOR GOOD ACCURACY.
12. WHERE BEAMS ARE INDICATED TO BE PENETRATED WITH DUCTWORK OR PIPING, COORDINATE DUCTWORK AND PIPING LAYOUT WITH BEAM OPENING SIZE AND OPENING LOCATIONS. COORDINATION SHALL BE DONE PRIOR TO THE FABRICATION OF DUCTWORK, CUTTING OF PIPING, OR FABRICATION OF BEAMS.
13. ALL MISCELLANEOUS STEEL REQUIRED TO ENSURE PROPER INSTALLATION AND AS SHOWN IN THE DETAILS FOR PIPING, DUCTWORK, AND EQUIPMENT (UNLESS OTHERWISE NOTED) SHALL BE FURNISHED AND INSTALLED BY THE MECHANICAL CONTRACTOR.
14. PROVIDE ACCESS PANELS FOR INSTALLATION IN WALLS AND CEILINGS, WHERE REQUIRED, TO SERVICE DAMPERS, VALVES, SMOKE DETECTORS, AND OTHER CONCEALED MECHANICAL EQUIPMENT. ACCESS PANELS SHALL BE TURNED OVER TO THE GENERAL CONTRACTOR FOR INSTALLATION. ACCESS PANELS SHALL HAVE THE EQUAL RATED CAPACITY (1HR, 2HR, ETC.) AS WALL.
15. MECHANICAL EQUIPMENT, DUCTWORK, AND PIPING SHALL NOT BE SUPPORTED FROM A METAL DECK.
16. ALL EQUIPMENT, PIPING, DUCTWORK, ETC., SHALL BE SUPPORTED AS DETAILED, SPECIFIED AND REQUIRED TO PROVIDE A VIBRATION-FREE INSTALLATION.
17. ALL DUCTWORK, PIPING, AND EQUIPMENT SUPPORTED FROM STRUCTURAL STEEL SHALL BE COORDINATED WITH THE GENERAL CONTRACTOR. ALL ATTACHMENTS TO STEEL BAR JOISTS, TRUSSES, OR JOIST GIRDERS SHALL BE AT PANEL POINTS. PROVIDE BEAM CLAMPS MEETING MSS STANDARDS. WELDING TO STRUCTURAL MEMBERS SHALL NOT BE PERMITTED. THE USE OF C-CLAMPS SHALL NOT BE PERMITTED.
18. ALL ROOF-MOUNTED EQUIPMENT CURBS/STEEL RAILS FOR EQUIPMENT PROVIDED BY THIS MECHANICAL CONTRACTOR SHALL BE FURNISHED BY THE MECHANICAL CONTRACTOR AND INSTALLED BY THE GENERAL CONTRACTOR.
19. LOCATIONS AND SIZES OF ALL FLOOR, WALL, AND ROOF OPENINGS SHALL BE COORDINATED WITH ALL OTHER TRADES INVOLVED.
20. ALL OPENINGS IN FIRE WALLS DUE TO DUCTWORK, PIPING, CONDUIT, ETC., SHALL BE FIRE STOPPED WITH A PRODUCT SIMILAR TO 3M OR APPROVED EQUAL.
21. ALL AIR CONDITIONING CONDENSATE DRAIN LINES FROM EACH AIR HANDLING UNIT SHALL BE PIPED FULL SIZE OF THE UNIT DRAIN OUTLET, WITH "P" TRAP, AND PIPED TO THE NEAREST DRAIN. SEE THE DETAILS SHOWN IN THE DRAWINGS OR THE CONTRACT SPECIFICATIONS FOR THE DEPTH OF THE AIR CONDITIONING CONDENSATE TRAP.
22. REFER TO TYPICAL DETAILS FOR DUCTWORK, PIPING, AND EQUIPMENT INSTALLATION.

SCOPE OF WORK

SCOPE OF WORK

1. THE WORK UNDER CONTRACT INCLUDES ALL LABOR, MATERIALS AND APPLIANCES NECESSARY FOR THE FURNISHING, INSTALLING AND TESTING, COMPLETE AND READY FOR SAFE OPERATION OF THE SYSTEMS AS DESCRIBED IN THE SPECIFICATIONS, FLOOR PLAN(S) DESIGN, DETAIL DRAWINGS, NOTES, RFI'S, ETC. FOR THIS PROJECT. WORK SHALL BE INSTALLED IN A NEAT, WORKMANLIKE MANNER.
2. THE CONTRACTOR SHALL GIVE NECESSARY NOTICE, FILE DRAWINGS AND SPECIFICATIONS WITH THE DEPARTMENT HAVING JURISDICTION, OBTAIN PERMITS OR LICENSES NECESSARY TO CARRY OUT THIS WORK AND PAY ALL FEES THEREFORE. THE CONTRACTOR SHALL ARRANGE FOR INSPECTION AND TESTS OF ANY OR ALL PARTS OF THE WORK IF SO REQUIRED BY AUTHORITIES AND PAY ALL CHARGES FOR SAME. THE CONTRACTOR SHALL PAY ALL COSTS FOR, AND FURNISH TO THE OWNER BEFORE FINAL BILLING, ALL CERTIFICATES NECESSARY AS EVIDENCE THAT THE WORK INSTALLED CONFORMS WITH ALL REGULATIONS WHERE THEY APPLY TO THIS WORK.
3. THE CONTRACTOR SHALL FURNISH A WRITTEN GUARANTEE TO REPLACE OR REPAIR PROMPTLY AND ASSUME RESPONSIBILITY FOR ALL EXPENSES INCURRED FOR ANY WORKMANSHIP AND EQUIPMENT IN WHICH DEFECTS DEVELOP WITHIN ONE YEAR FROM THE DATE OF FINAL CERTIFICATE FOR PAYMENT AND/OR FROM DATE OR ACTUAL USE OF EQUIPMENT OR OCCUPANCY OF SPACES, BY OWNER, INCLUDED UNDER THE VARIOUS PARTS OF THE WORK, WHICHEVER DATE IS EARLIER. THIS WORK SHALL BE DONE AS DIRECTED BY THE OWNER. THIS GUARANTEE SHALL ALSO PROVIDE THAT WHERE DEFECTS OCCUR, THE CONTRACTOR WILL ASSUME RESPONSIBILITY FOR ALL EXPENSES INCURRED IN REPAIRING AND REPLACING WORK OF OTHER TRADES AFFECTED BY DEFECTS, REPAIRS OR REPLACEMENTS IN EQUIPMENT SUPPLIED BY THE CONTRACTOR.

DESIGN PROFESSIONAL

NY ENGINEERS

382 NE 191st Street Suite 49674
MIAMI, FL 33179
(786)-788-0295
ny-engineers.com

DATES

LL COMMENTS #1 2025.08.20

PROJECT

TITLE

MECHANICAL SYMBOL, ABBREVIATION & NOTES

SHEET NO.

M0.1

Property of NY Engineers

SPECIFICATIONS

SECTION 0001 - NOTICE TO BIDDERS

1.1 BIDDERS REPRESENTATIONS

A. THE BIDDER BY MAKING A BID REPRESENTS THAT:

B. THE BIDDER HAS READ AND UNDERSTANDS THE BIDDING DOCUMENTS, TO THE EXTENT THAT SUCH DOCUMENTATION RELATES TO THE WORK FOR WHICH THE BID IS SUBMITTED, AND FOR OTHER PORTIONS OF THE PROJECT, IF ANY, BEING BID CONCURRENTLY OR PRESENTLY UNDER CONSTRUCTION.

C. THE BID IS MADE IN COMPLIANCE WITH THE BIDDING DOCUMENTS.

D. THE SPECIFICATIONS AND DRAWINGS ARE INTENDED TO SERVE JOINTLY AS A BASIS FOR THE BIDDER TO SUBMIT A CONTRACT PRICE FOR THE MATERIAL AND LABOR.

E. SHOULD CONFLICTS OR DISCREPANCIES OCCUR WITHIN THE BIDDING DOCUMENTS, THE ITEM OR ITEMS IN DISPUTE THAT REPRESENT THE GREATER COST SHALL PREVAIL IN THE FINAL BID.

F. THE BID IS BASED UPON THE MATERIALS, EQUIPMENT AND SYSTEMS REQUIRED BY THE BIDDING DOCUMENTS WITHOUT EXCEPTION.

1.2 EXISTING CONDITIONS AND COORDINATION

A. THE BIDDER HAS VISITED THE SITE, BECOME FAMILIAR WITH LOCAL CONDITIONS UNDER WHICH THE WORK IS TO BE PERFORMED, AND HAS CORRELATED THE BIDDER'S OBSERVATIONS WITH THE REQUIREMENTS OF THE PROPOSED BIDDING DOCUMENTS.

B. THE BIDDER SHALL PROPOSE COORDINATION OF WORK SUCH THAT CONFLICTS WITH OTHER TRADES AND SPACE ALLOCATIONS ARE AVOIDED.

1.3 RESPONSIBILITIES

A. THE BIDDER UNDERSTANDS THAT ANY CONTRACTOR SHALL BE FULLY RESPONSIBLE FOR THE TIMELY COMPLETION AND ACCEPTANCE OF THEIR WORK AND THAT ANY ITEMS DAMAGED, LOST, OR STOLEN DURING TIME OF CONSTRUCTION SHALL BE REPAIRED OR REPLACED WITHOUT ANY ADDITIONAL COST TO THE OWNER.

B. THE BIDDER UNDERSTANDS THAT ANY PROPOSED WORK IN OCCUPIED TENANT SPACES SHALL BE PERFORMED DURING TIMES OF NON-TENANT OCCUPANCY OR AS SCHEDULED OR DIRECTED BY THE BUILDING MANAGER.

C. THE BIDDER UNDERSTANDS THAT ANY PROPOSED SHUTDOWN OF EXISTING SYSTEMS DURING CONSTRUCTION SHALL BE PRE-ARRANGED WITH THE BUILDING MANAGER AND THAT SUCH SHUTDOWNS ARE TO BE KEPT TO A MINIMUM.

END OF SECTION 0001

SECTION 0101 - QUALITY OF WORK

1.1 WORKMANSHIP

A. ALL WORK SHALL BE FREE FROM DEFECTS IN MATERIALS AND WORKMANSHIP FOR A PERIOD OF ONE YEAR FROM DATE OF FINAL ACCEPTANCE.

B. ALL DEFECTS WHICH DEVELOP OR ARE DISCOVERED WITHIN THIS PERIOD SHALL BE REPAIRED BY THE CONTRACTOR TO THE SATISFACTION OF THE ARCHITECT OR BUILDING MANAGER AT NO ADDITIONAL COST TO THE OWNER.

C. UPON COMPLETION OF THE WORK THE CONTRACTOR SHALL REMOVE FROM THE SITE, ALL TOOLS, DEMOLISHED APPLIANCES AND ANY SURPLUS MATERIAL.

1.2 CODE COMPLIANCE

A. ALL WORK SHALL MEET ALL STATE AND LOCAL CODES HAVING JURISDICTION.

END OF SECTION 0101

SECTION 0102 -REQUIRED DOCUMENTS

1.1 SHOP DRAWINGS

A. A SET OF PRINTS FOR ANY MECHANICAL WORK INCLUDING BUT NOT LIMITED TO, DUCTWORK AND PIPING LAYOUT SHALL BE SUBMITTED FOR APPROVAL TO THE ENGINEER PRIOR TO CONSTRUCTION OR PURCHASE OF MATERIALS.

1.2 SUBMITTALS

A. EQUIPMENT SUBMITTALS OF ALL PROPOSED MECHANICAL AND ANCILLARY EQUIPMENT INCLUDING ALL ACCESSORIES SHALL BE SUBMITTED TO THE ENGINEER FOR REVIEW. ALL PERTINENT MODELS, SIZES, ACCESSORIES, AND CHOICES SHALL BE CHECKED, PRINTED, OR OTHERWISE INDICATED ON THE SUBMITTALS.

1.3 RECORD DRAWINGS

A. UPON COMPLETION OF THE WORK, A RECORD DRAWING SHALL BE SUBMITTED TO THE OWNER DEPICTING ALL SUBSEQUENT CHANGES, ADDITIONS AND OR CORRECTIONS TO THE CONTRACT DRAWINGS AND OR CONTRACT SCOPE MADE DURING CONSTRUCTION. THIS DRAWING SHALL REPRESENT A COMPLETE RECORD OF THE WORK INSTALLED.

1.4 EQUIPMENT OPERATING INSTRUCTIONS

A. ON COMPLETION AND ACCEPTANCE OF WORK, THIS CONTRACTOR SHALL FURNISH WRITTEN INSTRUCTIONS, EQUIPMENT MANUALS AND DEMONSTRATE TO THE OWNER THE PROPER OPERATION AND MAINTENANCE OF ALL EQUIPMENT AND APPARATUS FURNISHED UNDER THIS CONTRACT.

B. THESE INSTRUCTIONS SHALL BE TYPED ON 8-1/2 IN. X 11 IN. PAPER AND BOUND IN THREE-RING BINDERS WITH CLEAR ACETATE COVERS. THE CONTRACTOR SHALL GIVE THREE COPIES OF THE INSTRUCTIONS TO THE OWNER AND ONE ELECTRONIC COPY TO THE ENGINEER.

C. THE INSTRUCTION BOOKLET SHALL BE ORGANIZED IN SECTIONS, WITH ONE SECTION PER SYSTEM. THE COVER OF THE INSTRUCTION BOOKLET SHALL BEAR THE NAME, ADDRESS AND PHONE NUMBER OF THE PROJECT, ARCHITECT, ENGINEER, MECHANICAL CONTRACTOR AND SUBCONTRACTORS.

END OF SECTION 0102

SECTION 078413-PENETRATION FIRE-STOPPING

1.1 QUALITY ASSURANCE

A. INSTALLER QUALIFICATIONS: AN FM GLOBAL-APPROVED FIRE-STOP CONTRACTOR OR A UL-QUALIFIED FIRE-STOP CONTRACTOR.

B. FIRE-TEST-RESPONSE CHARACTERISTICS: UL, INTERTEK ETL SEMKO OR FM GLOBAL

1.2 PENETRATION FIRESTOPPING

A. PENETRATIONS IN FIRE-RESISTANCE-RATED WALLS: F-RATINGS PER ASTM E 814 OR UL 1479.

B. PENETRATIONS IN HORIZONTAL ASSEMBLIES: F- AND T-RATINGS PER ASTM E 814 OR UL 1479:

C. PENETRATIONS IN SMOKE BARRIERS: L-RATINGS PER UL 1479.

D. W-RATINGS: PER UL 1479.

1.3 INSTALLATION

A. IDENTIFICATION: PREPRINTED METAL OR PLASTIC LABELS.

1.5 FIELD QUALITY CONTROL

A. INSPECTION OF INSTALLED FIRE-STOPPING: BY OWNER-ENGAGED AGENCY ACCORDING TO ASTM E 2174.

1.5 THROUGH-PENETRATION FIRESTOP SYSTEM SCHEDULE:

A. WHERE UL-CLASSIFIED SYSTEMS ARE INDICATED, THEY REFER TO SYSTEM NUMBERS IN UL'S "FIRE RESISTANCE DIRECTORY" UNDER PRODUCT CATEGORY XHEZ.

B. FOR THE FOLLOWING SYSTEMS: METALLIC AND NON-METALLIC PIPES, CONDUIT, OR TUBING, ELECTRICAL CABLES, CABLE TRAYS WITH ELECTRIC CABLES, MISCELLANEOUS ELECTRICAL PENETRANTS, INSULATED PIPES, GROUPINGS OF PENETRANTS, USE ONE OR MORE OF THE FOLLOWING MATERIALS:

a. LATEX SEALANT

b. SILICONE SEALANT

c. MORTAR

d. SILICONE FOAM

e. PILLOWS/BAGS

f. INTUMESCENT WRAP STRIPS

1.6 MANUFACTURERS

A. HILTI CONSTRUCTION CHEMICAL, INC

B. 3M FIRE PROTECTION PRODUCTS

END OF SECTION 078413

SECTION 230517 - SLEEVES AND SLEEVE SEALS FOR HVAC PIPING

1.1 SLEEVE-SEAL SYSTEMS

A. FIELD-ASSEMBLED, MODULAR SEALING-ELEMENT UNIT FOR FILLING ANNULAR SPACE BETWEEN PIPING AND SLEEVE.

1. SEALING ELEMENTS: EPDM RUBBER OR NBR.
2. PRESSURE PLATES: CARBON STEEL, PLASTIC, STAINLESS STEEL.
3. CONNECTING BOLTS AND NUTS: CARBON STEEL WITH CORROSION-RESISTANT COATING, STAINLESS STEEL.

B. MANUFACTURERS: SUBJECT TO COMPLIANCE WITH REQUIREMENTS, AVAILABLE MANUFACTURERS OFFERING PRODUCTS THAT MAY BE INCORPORATED INTO THE WORK INCLUDE, BUT ARE NOT LIMITED TO, THE FOLLOWING:

1. ADVANCE PRODUCTS & SYSTEMS, INC.
2. CALPICO, INC.
3. METRAFLEX COMPANY (THE).
4. PIPELINE SEAL AND INSULATOR, INC.

1.2 SLEEVE-SEAL FITTINGS

A. MANUFACTURED PLASTIC, SLEEVE-TYPE, PLASTIC OR RUBBER WATER-STOP ASSEMBLY MADE FOR IMBEDDING IN CONCRETE SLAB OR WALL.

1.3 GROUT

A. NON-SHRINK, FACTORY PACKAGED.

1.4 SLEEVE AND SLEEVE-SEAL SCHEDULE

A. USE SLEEVES AND SLEEVE SEALS FOR THE FOLLOWING PIPING-PENETRATION APPLICATIONS:

1. INTERIOR PARTITIONS:

a. PIPING SMALLER THAN NPS 6 (DN 150): GALVANIZED-STEEL-PIPE SLEEVES, PVC-PIPE SLEEVES.

b. PIPING NPS 6 (DN 150) AND LARGER: GALVANIZED-STEEL-SHEET SLEEVES.

END OF SECTION 230517

SECTION 230529 - HANGERS AND SUPPORTS FOR HVAC PIPING AND EQUIPMENT

1.1 PERFORMANCE REQUIREMENTS

A. DELEGATED DESIGN: DESIGN TRAPEZE PIPE HANGERS AND EQUIPMENT SUPPORTS, INCLUDING COMPREHENSIVE ENGINEERING ANALYSIS BY A QUALIFIED PROFESSIONAL ENGINEER, USING PERFORMANCE REQUIREMENTS AND DESIGN CRITERIA INDICATED.

B. STRUCTURAL PERFORMANCE: HANGERS AND SUPPORTS FOR HVAC PIPING AND EQUIPMENT SHALL WITHSTAND THE EFFECTS OF GRAVITY LOADS AND STRESSES WITHIN LIMITS AND UNDER CONDITIONS INDICATED ACCORDING TO ASCE/SEI 7.

1. DESIGN SUPPORTS FOR MULTIPLE PIPES CAPABLE OF SUPPORTING COMBINED WEIGHT OF SUPPORTED SYSTEMS, SYSTEM CONTENTS, AND TEST WATER.
2. DESIGN EQUIPMENT SUPPORTS CAPABLE OF SUPPORTING COMBINED OPERATING WEIGHT OF SUPPORTED EQUIPMENT AND CONNECTED SYSTEMS AND
3. DESIGN SEISMIC-RESTRAINT HANGERS AND SUPPORTS FOR PIPING AND EQUIPMENT AND OBTAIN APPROVAL FROM AUTHORITIES HAVING JURISDICTION.

1.2 SUBMITTALS

A. SHOP DRAWINGS: SIGNED AND SEALED BY A PROFESSIONAL ENGINEER

1.3 QUALITY ASSURANCE

A. AWS D1.1/D1.1M, "STRUCTURAL WELDING CODE - STEEL."

1.4 COMPONENTS

A. METAL PIPE HANGERS AND SUPPORTS: CARBON OR STAINLESS STEEL

B. FIBERGLASS PIPE HANGERS: -CLEVIS, CENTURY COMPOSITES, COOPER B-LINE

D. METAL FRAMING SYSTEMS: MFMA MANUFACTURER

E. FIBERGLASS STRUT SYSTEMS: COOPER B-LINE

F. THERMAL-HANGER SHIELD INSERTS:

G. FASTENER SYSTEMS: POWDER-ACTUATED FASTENERS OR MECHANICAL-EXPANSION ANCHORS

H. PIPE STANDS: COMPACT, LOW TYPE, SINGLE PIPE, HIGH TYPE, SINGLE PIPE, HIGH TYPE, MULTIPLE PIPES, CURB-MOUNTED TYP EQUIPMENT SUPPORTS.

END OF SECTION 230529

SECTION 230548 - VIBRATION CONTROLS FOR PIPING AND HVAC EQUIPMENT

PART 1 - GENERAL

1.1 PERFORMANCE REQUIREMENTS

A. SEISMIC-RESTRAINT LOADING:

1. SITE CLASS AS DEFINED IN THE IBC: A, B
2. ASSIGNED SEISMIC USE GROUP OR BUILDING CATEGORY AS DEFINED IN THE IBC: I II III

a. COMPONENT IMPORTANCE FACTOR: 1.0

b. COMPONENT RESPONSE MODIFICATION FACTOR: 2.5

c. COMPONENT AMPLIFICATION FACTOR: 2.5.

3. DESIGN SPECTRAL RESPONSE ACCELERATION AT SHORT PERIODS (0.2 SECOND) 18%
4. DESIGN SPECTRAL RESPONSE ACCELERATION AT 1-SECOND PERIOD: 8%

1.2 COMPONENTS

A. VIBRATION ISOLATORS:

1. ISOLATOR PADS: NEOPRENE, RUBBER, HERMETICALLY AND/OR SEALED COMPRESSED FIBERGLASS
2. MOUNTS: DOUBLE-DEFLECTION TYPE.
3. RESTRAINED MOUNTS: ALL DIRECTIONAL MOUNTINGS WITH SEISMIC RESTRAINT; CAST-DUCTILE-IRON HOUSING.
4. SPRING ISOLATORS: FREESTANDING, LATERALLY STABLE, OPEN-SPRING TYPE.
5. RESTRAINED SPRING ISOLATORS: FREESTANDING, STEEL, OPEN-SPRING TYPE WITH SEISMIC RESTRAINT.
6. HOUSED SPRING MOUNTS: DUCTILE-IRON OR STEEL HOUSING, WITH INTEGRAL, VERTICALLY ADJUSTABLE SEISMIC SNUBBERS.
7. ELASTOMERIC HANGERS: DOUBLE-DEFLECTION TYPE.
8. SPRING HANGERS: COMBINATION COIL-SPRING AND ELASTOMERIC-INSERT HANGERS WITH SPRING AND INSERT IN COMPRESSION.
9. SPRING HANGERS WITH VERTICAL-LIMIT STOP: COMBINATION COIL-SPRING AND ELASTOMERIC-INSERT HANGERS WITH SPRING AND INSERT IN COMPRESSION AND WITH VERTICAL-LIMIT STOP.
10. PIPE RISER RESILIENT SUPPORT: ALL-DIRECTIONAL, ACOUSTICAL PIPE ANCHOR.
11. RESILIENT PIPE GUIDES.

B. AIR-MOUNTING SYSTEMS:

1. AIR MOUNTS: FREESTANDING, SINGLE OR MULTIPLE, COMPRESSED-AIR BELLOWS.
2. RESTRAINED AIR MOUNTS: HOUSED COMPRESSED-AIR BELLOWS.

C. RESTRAINED VIBRATION ISOLATION ROOF-CURB RAILS: FACTORY-ASSEMBLED, FULLY ENCLOSED, INSULATED, AIR- AND WATERTIGHT CURB RAIL; WITH SPRING ISOLATORS MOUNTED ON ELASTOMERIC ISOLATION PADS, AND SNUBBER BUSHINGS.

D. VIBRATION ISOLATION EQUIPMENT BASES:

1. STEEL BASE: FACTORY- FABRICATED, WELDED, STRUCTURAL-STEEL BASES AND RAILS.
2. INERTIA BASE: FACTORY- FABRICATED, WELDED, STRUCTURAL-STEEL BASES AND RAILS READY FOR FIELD-APPLIED, CAST-IN-PLACE CONCRETE

1.3 FIELD QUALITY CONTROL

A. TESTING: BY EITHER OWNER-ENGAGED AGENCY, CONTRACTOR-ENGAGED AGENCY, OR CONTRACTOR.

PART-2 PRODUCTS

1.4 VIBRATION ISOLATORS & SEISMIC-RESTRAINT DEVICES

A. AVAILABLE MANUFACTURERS: SUBJECT TO COMPLIANCE WITH REQUIREMENTS, MANUFACTURERS OFFERING PRODUCTS THAT MAY BE INCORPORATED INTO THE WORK INCLUDE, BUT ARE NOT LIMITED TO, THE FOLLOWING:

B. MANUFACTURERS: SUBJECT TO COMPLIANCE WITH REQUIREMENTS, PROVIDE PRODUCTS BY ONE OF THE FOLLOWING:

1. ACE MOUNTINGS CO., INC.
2. AMBER/BOOTH COMPANY, INC.
3. CALIFORNIA DYNAMICS CORPORATION.
4. COOPER B-LINE, INC.; A DIVISION OF COOPER INDUSTRIES.
5. HILTI, INC.
6. ISOLATION TECHNOLOGY, INC.
7. KINETICS NOISE CONTROL.

END OF SECTION 230548

SECTION 230593 - TESTING, ADJUSTING, AND BALANCING FOR HVAC

1.1 SUMMARY

A. TESTING, ADJUSTING, AND BALANCING FOR THE FOLLOWING:

1. MOTORS.
2. CONDENSING UNITS.
3. AIR SYSTEM: CONSTANT VOLUME

1.2 QUALITY ASSURANCE

A. THE CONTRACTOR SHALL PROCURE THE SERVICES OF A TESTING, ADJUSTING AND BALANCING (TAB) SPECIALIST WHO SPECIALIZES IN HEATING, VENTILATION AND AIR CONDITIONING SYSTEMS. THE TAB AGENT SHALL HAVE THE FOLLOWING QUALIFICATIONS: AABC, NEBB OR TABB CERTIFIED.

1.3 EXECUTION

A. THE TAB SPECIALIST SHALL PERFORM FLOW MEASUREMENTS OF ALL EXISTING AIR AND HYDRONIC SYSTEMS THAT ARE TO REMAIN OR TO BE INCORPORATED INTO NEW WORK PRIOR TO THE STARTING OF WORK IN THE PROJECT SCOPE. A REPORT OF THESE MEASUREMENTS, INDICATING ANY AND ALL DEFICIENCIES SHALL BE SUBMITTED FOR OWNER REVIEW.

B. THE TAB SPECIALIST SHALL PERFORM FLOW MEASUREMENTS OF ALL NEW AIR AND HYDRONIC SYSTEMS AS LISTED ABOVE IN THE PROJECT SCOPE. A REPORT OF THESE MEASUREMENTS, INDICATING ANY AND ALL DEFICIENCIES SHALL BE SUBMITTED FOR OWNER REVIEW.

C. THE REPORT SHALL INDICATE A SCHEMATIC DIAGRAM INDICATING LOCATIONS OF ALL EQUIPMENT TESTED AND MEASUREMENT LOCATIONS.

D. PRIOR TO FINAL INSPECTION OF THE WORK, THE TAB SPECIALIST SHALL BALANCE ALL SYSTEMS AS INDICATED ABOVE TO THE REQUIREMENTS OF THE DESIGN.

E. THE CONTRACTOR SHALL HAVE FURNISH AND INSTALL ALL ADDITIONAL BALANCING EQUIPMENT, PRESSURE TAPS, GAUGES AND OTHER EQUIPMENT AS REQUIRED FOR A PROPERLY BALANCED SYSTEM AT NO ADDITIONAL COST TO THE OWNER. SUCH ADDITIONAL EQUIPMENT SHALL ADHERE IN STRICT ACCORDANCE WITH THE RESPECTIVE EQUIPMENT MANUFACTURER'S RECOMMENDATIONS.

F. THE CONTRACTOR SHALL HAVE THE TESTING AND BALANCING SPECIALIST COORDINATE ALL WORK OF THIS S3ECTION WITH THE BUILDING MANAGER. BALANCING WORK SHALL NOT CONFLICT WITH OTHER WORK SO AS TO MAINTAIN COMPLETION WITHIN THE SPECIFIED TIME.

G. ALL INSTRUMENTS USED FOR TAB SHALL BE MAINTAINED IN GOOD WORKING CONDITION AND ACCURATELY CALIBRATED.

H. TOLERANCES: PLUS OR MINUS 5 PERCENT OF DESIGN VALUES.

I. INSPECTIONS: RANDOM CHECKS BY OWNER OR ARCHITECT TO VERIFY FINAL TESTING, ADJUSTING, AND BALANCING REPORT.

J. ADDITIONAL TESTS: RANDOM TESTS WITHIN 90 DAYS OF COMPLETING TAB TO VERIFY BALANCE CONDITIONS AND SEASONAL TESTS.

END OF SECTION 230593

SECTION 233713 - DIFFUSERS, REGISTERS, AND GRILLES

1.1 PRODUCTS

A. DIFFUSERS, REGISTERS AND GRILLES SHALL BE FURNISHED AND INSTALLED FOR CAPACITIES AND IN LOCATIONS INDICATED ON DRAWINGS. ALL REGISTERS AND DIFFUSERS SHALL BE PRIME COATED STEEL OR EXTRUDED ALUMINUM FINISHED UNLESS OTHERWISE NOTED IN BAKED WHITE ENAMEL.

B. MANUFACTURERS: TITUS

1. SUBJECT TO COMPLIANCE WITH REQUIREMENTS, PROVIDE PRODUCT BY ONE OF THE FOLLOWING:

a. HART & COOLEY INC.

b. KRUEGER.

c. METALAIRE, INC.

d. RUSKIN

e. PRICE

C. ALL DIFFUSERS SHALL HAVE CONTROLLING/EQUALIZING GRID AND OPPOSED BLADE DAMPER UNLESS OTHERWISE NOTED.

D. ALL DUCTED RETURN REGISTERS SHALL HAVE AN OPPOSED BLADE DAMPER UNLESS OTHERWISE NOTED.

END OF SECTION 233713

SECTION 233113 - METAL DUCTS

1.1 CONSTRUCTION

A. EACH DUCT SYSTEM SHALL BE CONSTRUCTED FOR THE SPECIFIC SMACNA DUCT PRESSURE CLASSIFICATIONS SHOWN ON THE CONTRACT DRAWINGS. WHERE NO PRESSURE CLASSES ARE SPECIFIED BY THE DESIGNER, THE SMACNA 1 INCH WG PRESSURE, SEAL CLASS "A".

B. ALL DUCTWORK SHALL BE CONSTRUCTED TO SMACNA 1" WG DESIGN AND NOT LESS THAN THE FOLLOWING STANDARDS:

1. CONSTRUCT SO THAT ALL INTERIOR SURFACES ARE SMOOTH. USE SLIP AND DRIVE OR FLANGED AND BOLTED CONSTRUCTION WHEN FABRICATING RECTANGULAR DUCTWORK. USE SPIRAL LOCK SEAM CONSTRUCTION WHEN FABRICATING ROUND SPIRAL DUCTWORK. SHEET METAL SCREWS MAY BE USED ON DUCT HANGERS, TRANSVERSE JOINTS AND OTHER SMACNA APPROVED LOCATIONS IF THE SCREW DOES NOT EXTEND MORE THAN 1/2 INCH INTO THE DUCT.
2. SHEET STEEL SHALL COMPLY WITH ASTMA653 STANDARD SPECIFICATION FOR STEEL SHEET METAL, ZINC COATED (GALVANIZED) OR ZINC IRON ALLOY-COATED (GALVANNEALED) BY HOT DIP PROCESS, AND A924 STANDARD SPECIFICATION FOR GENERAL REQUIREMENT FOR SHEET METALLIC-COATED BY HOT DIP PROCESS. ALL ANGLE IRON USED FOR SUPPORT SHALL BE GALVANIZED. CONNECTIONS TO WALLS OR FLOOR SHALL BE AIR TIGHT WITH ANGLE IRON AND CAULKING. SEAL ALL DUCT SEAMS, TRANSVERSE AND LONGITUDINAL, AIR TIGHT. PROVIDE TURNING VANES ALL 90° ELBOWS.
3. USE ELBOWS AND TEES WITH A CENTER LINE RADIUS TO WIDTH OR DIAMETER RATIO OF 1.5 WHEREVER SPACE PERMITS. WHEN A SHORTER RADIUS MUST BE USED DUE TO LIMITED SPACE, INSTALL SINGLE WALL SHEET METAL SPLITTER VANES IN ACCORDANCE WITH SMACNA PUBLICATIONS, TYPE RE 3. WHERE SPACE WILL NOT ALLOW AND THE C VALUE OF THE RADIUS ELBOW, AS GIVEN IN SMACNA PUBLICATIONS, EXCEEDS 0.31, USE RECTANGULAR ELBOWS WITH TURNING VANES AS SPECIFIED IN SECTION 23 33 00. SQUARE THROAT-RADIUS HEEL ELBOWS WILL NOT BE ACCEPTABLE. STRAIGHT TAPS OR BULLHEAD TEES ARE NOT ACCEPTABLE.
4. WHERE RECTANGULAR ELBOWS ARE USED, PROVIDE TURNING VANES IN ACCORDANCE WITH SECTION 23 33 00.
5. PROVIDE EXPANDED TAKE-OFFS OR 45 DEGREE ENTRY FITTINGS FOR BRANCH DUCT CONNECTIONS WITH BRANCH DUCTWORK AIRFLOW VELOCITIES GREATER THAN 700 FPM. SQUARE EDGE 90-DEGREE TAKE-OFF FITTINGS OR TRAIGHT TAPS WILL NOT BE ACCEPTED.
6. BUTTON PUNCH SNAP-LOCK CONSTRUCTION WILL NOT BE ACCEPTED ON ALUMINUM DUCTWORK.

C. WHERE LATEST EDITION OF SMACNA DOES NOT CLEARLY STATE GAUGES AND/OR STIFFENERS TO BE USED OR, WHERE SMACNA STANDARDS REQUIRE INTERPRETATION, THE FOLLOWING MINIMUM METAL GAUGES AND BRACING SHALL BE USED:

SUPPORT SCHEDULE - DUCTWORK

USG	MAX SIDE INCHES	TRANSVERSE JOINT AND BRACING
22	UP TO 12	S SLIP, DRIVE, ONE INCH POCKET ON 8 FOOT
22	13 TO 24	1"X1"X1/8" ANGLES ON 4 FOOT CENTERS
20	25 TO 35	1"X1"X1/8" ANGLES ON 2 FOOT CENTERS

D. PROVIDE TAPPING IN DUCTS FOR THERMOMETERS WHERE SPECIFIED. IN ADDITION, PROVIDE AN AIRTIGHT PLUGGED TAPPING LOCATED AS FOLLOWS:

1. UPSTREAM OF EACH REHEAT COIL AND VAV BOX.
2. DOWNSTREAM OF EACH REHEAT COIL AND VAV BOX.

E. FLAT OVAL OR ROUND DUCTWORK MAY BE PROVIDED IN LIEU OF RECTANGULAR DUCTWORK WITH THE REINFORCEMENT FOR FLAT SIDES SAME AS SPECIFIED FOR THE RECTANGULAR DUCTWORK, AND AS PER SMACNA FLAT OVAL DUCT CONSTRUCTION STANDARDS

F. ALL DUCTWORK SHALL BE SEALED TO CLASS "A" AND LEAK TESTED TO MEAT SMACNA CLASS 6 FOR RECTANGULAR AND CLASS 3 FOR ROUND DUCTS.

1.2 MATERIALS

A. SINGLE-WALL RECTANGULAR DUCTS AND FITTINGS.

B. SINGLE-WALL ROUND AND FLAT-OVAL DUCTS AND FITTINGS.

C. SHEET METAL MATERIALS:

1. GALVANIZED SHEET STEEL.
2. STAINLESS-STEEL SHEETS.
3. ALUMINUM SHEETS.
4. FACTORY-APPLIED ANTI-MICROBIAL COATING.

D. DUCT LINER:

1. FIBROUS GLASS, TYPE I, FLEXIBLE WITH ANTI-MICROBIAL EROSION-RESISTANT COATING.
2. FLEXIBLE ELASTOMERIC.
3. NATURAL FIBER.

E. SEALANT MATERIALS:

3. TWO-PART TAPE SEALING SYSTEM.
4. WATER-BASED JOINT AND SEAM SEALANT.
5. SOLVENT-BASED JOINT AND SEAM SEALANT.
6. FLANGED JOINT SEALANT.
7. FLANGE GASKETS.
8. ROUND DUCT JOINT O-RING SEALS.

1.3 DUCT CLEANING

A. CLEAN EXISTING DUCT SYSTEM(S) BEFORE TESTING, ADJUSTING, AND BALANCING.

B. CLEAN THE FOLLOWING ITEMS:

1. AIR OUTLETS AND INLETS.
2. SUPPLY, RETURN, AND EXHAUST FANS.
3. AIR-HANDLING UNITS.
4. COILS AND RELATED COMPONENTS.
5. RETURN-AIR DUCTS, DAMPERS, ACTUATORS, AND TURNING VANES.
6. SUPPLY-AIR DUCTS, DAMPERS, ACTUATORS, AND TURNING VANES.
7. DEDICATED EXHAUST AND VENTILATION COMPONENTS AND MAKEUP AIR SYSTEMS.

1.4 DUCT SCHEDULE

A. ALL DUCTS SHALL BE GALVANIZED STEEL EXCEPT AS FOLLOWS:

1. MOIST ENVIRONMENT DUCT MATERIAL: ALUMINUM.

END OF SECTION 233113

SECTION 230713 - INSULATION

INSULATION - GENERAL REQUIREMENTS

A. ALL INSULATION MATERIALS, INCLUDING JACKETS, FACING, ADHESIVE, COATINGS, AND ACCESSORIES ARE TO BE FIRE HAZARD RATED AND LISTED BY UNDERWRITERS LABORATORIES, INC. USING STEINER TUNNEL TEST METHOD FOR FIRE HAZARD CLASSIFICATION OF BUILDING MATERIALS, STANDARD UL 723 (ASTM E-84), (ASA A2.5-1963). FLAMESPREAD: MAXIMUM 25. FUEL CONTRIBUTED AND SMOKE DEVELOPED: MAXIMUM 50. FLAMEPROOFING TREATMENTS SUBJECT TO DETERIORATION FROM MOISTURE OR HUMIDITY ARE NOT ACCEPTABLE.

B. DEFINITIONS:

1) EXPOSED: INDOOR DUCTS, PIPING OR EQUIPMENT LOCATED IN MECHANICAL EQUIPMENT ROOMS AND IN AREAS WHICH WILL BE VISIBLE WITHOUT REMOVING CEILINGS OR OPENING ACCESS PANELS.

2) CONCEALED: INDOOR DUCTS, PIPING OR EQUIPMENT WHICH IS NOT EXPOSED.

3) OUTDOOR: DUCTS, PIPING OR EQUIPMENT WHICH IS EXPOSED TO THE WEATHER.

DUCTWORK INSULATION

A. INSULATE ALL DUCTWORK IN ACCORDANCE WITH INSULATION SCHEDULE EXCEPT AS OTHERWISE NOTED.

INSULATION SCHEDULE - DUCTWORK

SERVICE	LOCATION	R-VALUE	TYPE	FINISH
SUPPLY/RETURN	CONCEALED	R-8	D-1	VAPORSEAL
SUPPLY/RETURN	CONDITIONED EXPOSED	R-4.2	D-1	VAPORSEAL
INTAKE	ALL	R-8	D-1	VAPORSEAL
SUPPLY	EXTERIOR	R-8	D-1	VAPORSEAL

B. REINSULATE ALL DUCTWORK AND PIPING WHICH IS EXISTING TO REMAIN AND WAS DAMAGED DURING CONSTRUCTION OR SHOWN OR REQUIRED TO BE RELOCATED. INSULATE WITH SAME MATERIAL AND THICKNESS.

C. NON-INSULATED DUCTWORK:

1) WHERE SOUND LINING IS OF MINIMUM THICKNESS SPECIFIED FOR INSULATION.

2) AIR CONDITIONING RETURN AIR DUCTWORK EXPOSED IN AIR CONDITIONED SPACES AND INSTALLED IN HUNG CEILINGS WHERE SPACE IMMEDIATELY ABOVE AND BELOW ARE BOTH AIR CONDITIONED.MATERIAL:

D. MATERIAL:

1) TYPE D-1: MINIMUM 1-LB DENSITY FIBERGLASS BLANKET, MAXIMUM 0.28 K-FACTOR AT 75 ADEG F MEAN TEMPERATURE WITH FACTORY-APPLIED FOIL-SKRIM-KRAFT FACING SIMILAR TO MANVILLE MICROLITE.

2) TYPE D-2: 3 LB. FIBERGLASS BOARD. THE MAXIMUM K FACTOR SHALL BE 0.23 AT 75 DEG F MEAN TEMPERATURE WITH A MINIMUM DENSITY OF 3 LB. THE INSULATION SHALL BE PROVIDED WITH A FACTORY-APPLIED ALL PURPOSE OR ALL SERVICE FACING. THE INSULATION SHALL BE EQUAL TO MANVILLE TYPE 814 SPIN-GLAS AP.

3) TYPE D-3: MINIMUM 6 LB FIBERGLASS BOARD. MAXIMUM 0.22 K-FACTOR AT 75 DEG F MEAN TEMPERATURE WITH FACTORY APPLIED ALL PURPOSE OR ALL SERVICE FACING. SIMILAR TO MANVILLE 817 SPIN-GLAS AP

E. FINISH:

1) TYPE F-1: FITTING COVER, MOLDED WHITE PVC JACKET, UL CLASS 1, MAXIMUM PERMEANCE 0.05 SIMILAR TO MANVILLE ZESTRON.

2) TYPE F-2: WHITE VAPOR BARRIER COATING WITH 10X10 OR 20X20 MESH WHITE GLASS, POLYESTER OR NYLON CLOTH REINFORCING MEMBRANE, MINIMUM 31 MIL DRY FILM THICKNESS, SIMILAR TO FOSTER TITE-FIT, UL LABEL.

3) TYPE F-4: ALUMINUM JACKETING WITH MINIMUM 0.016 IN. WALL THICKNESS AND LONGITUDINAL JOINTS WITH LOCK SEAMS.

4) TYPE F-6: WHITE FINISHING AND INSULATING CEMENT APPLIED OVER HEXAGONAL WIRE MESH. CEMENT SIMILAR TO KEENE SUPERSLICK.

F. INSTALLATION:

a. FIBERGLASS BLANKET: 2 IN. LAP STRIPS AT ALL SEAMS. SECURE BOTTOM OF ALL DUCTS OVER 24 IN. WIDE WITH MIN 2 ROWS OF WELD PINS 12 IN. ON CENTER. SECURE ALL SEAMS WITH FOIL VAPOR BARRIER TAPE AND VAPORSEAL ADHESIVE.

b. FIBERGLASS BOARD: SEAL JOINTS AND BREAKS IN FACING WITH 3 IN. WIDE TAPE TO MATCH FACING AND ADHERE WITH VAPOR SEAL ADHESIVE. APPLY 5 IN. WIDE TAPE AT CORNERS, WELD PINS ON TOP, SIDES AND BOTTOM.

G. ACOUSTICAL TREATMENT

ACOUSTICALLY LINE THE FIRST 10'-0" OF BOTH SUPPLY AND RETURN MAIN DUCTS, LOW PRESSURE DUCTWORK SHALL BE LINED WITH 1.5" THICK R-6 AS MANUFACTURED BY DUCTMATE, 1-1/2 POUND MINIMUM DENSITY, NEOPRENE COATED, FLEXIBLE FIBERGLASS DUCT LINER. LINING SHALL COMPLY WITH NFPA 90A AND SHALL HAVE A FLAME SPREAD CLASSIFICATION OF NOT MORE THAN 25 AND A SMOKE DEVELOPED RATING NOT MORE THAN 50. DUCT SIZES WHERE LINING IS INDICATED ON PLANS ARE MINIMUM INSIDE CLEAR DIMENSIONS REQUIRED.

PIPING INSULATION

INSULATION REQUIREMENT SHOULD COMPLY WITH CALIFORNIA STATE ENERGY CODE 2022. REFER BELOW TABLE FOR MINIMUM PIPE INSULATION THICKNESS ACC. TO CALIFORNIA PLUMBING CODE 2022 TABLE 120.3-A.

MINIMUM PIPE INSULATION THICKNESS

FLUID OPERATING TEMPERATURE RANGE AND USAGE (°F)	INSULATION CONDUCTIVITY		NOMINAL PIPE OR TUBE SIZE (INCHES)				
	CONDUCTIVITY BTUIN./(H.FT2°F)	MEAN RATING TEMPERATURE, °F	<1	1 to < 1½	1½ to < 4	4 to < 8	≥8
141-200	0.25-0.29	125	1.5	1.5	2	2	2
105-140	0.21-0.28	100	1.0	1.0	1.5	1.5	1.5
40-60	0.21-0.27	75	0.5	0.5	1.0	1.0	1.0

A. PIPING, VALVES AND FITTINGS TO BE INSULATED:

1) PROTECTIVE COVERINGS SHALL BE INSTALLED ON AREAS OF INSULATION THAT ARE EXPOSED TO WEATHER OR SUBJECT TO MECHANICAL DAMAGE.

THE PROTECTIVE COVERING SHALL BE:

a. ARMA-CHEK SILVER" MULTI-LAYER LAMINATE OF ALUMINUM, COATED WITH A UV PROTECTIVE FILM AND BACKED WITH A FLEXIBLE PVC FILM. THE MATERIAL SHOULD BE ADHERED WITH ARMAFLEX 520 ADHESIVE OR EQUIVALENT, AND ALL JOINS AND SEAMS SECURED WITH "ARMA-CHEK SILVER TAPE". INSTALLATION SHALL BE IN ALL CASES TO THE MANUFACTURER'S RECOMMENDATIONS.

OR

b. HIGH DENSITY RUBBER CLADDING OF THE "ARMA-CHECK R" TYPE BONDED USING AN APPROPRIATE FULL CONTACT ADHESIVE WITH A MINIMUM 50 MM OVERLAP AT ALL BUTT JOINTS AND LONGITUDINAL SEAMS. A WEATHER-PROOF MASTIC SEALANT SHALL BE APPLIED OVER ALL SEAMS AND JOINTS. ALL MATERIAL SHALL BE OVERLAPPED AND STAGGERED IN SUCH A WAY AS TO ENSURE A WATERSHED IS ALWAYS PROVIDED. INSTALLATION SHALL BE IN ALL CASES TO THE MANUFACTURER'S RECOMMENDATIONS. ALL EXCESS ADHESIVE VISIBLE ON THE SURFACE OF THE COMPLETED ASSEMBLY SHALL BE REMOVED USING AN APPROPRIATE CLEANING MATERIAL.

OR

c. METAL CLADDING, COMPRISED OF COATED SHEET METAL, WITH ALL EXTERNAL JOINTS AND FIXING MADE WEATHER-PROOF WITH SILICONE SEALANT.

C. MATERIAL:

1) TYPE P-1: MINIMUM 4 LB DENSITY MOLDED FIBERGLASS, MAXIMUM 0.24 K-FACTOR AT 75 DEG F MEAN TEMPERATURE WITH FACTORY-APPLIED FIRE-RETARDANT FOIL-SKRIM-KRAFT FACING. ALL SERVICE JACKET. SIMILAR TO OWENS-CORNING 650 ASJ.

2) TYPE P-3: MINIMUM 4 LB DENSITY MOLDED FIBERGLASS FITTING, MAXIMUM 0.23 K-FACTOR AT 75 DEG F MEAN TEMPERATURE SIMILAR TO EPOLUX HAMFAB MOLDED FITTINGS.

3) TYPE P-4: MINIMUM 1 LB DENSITY FIBERGLASS FITTING INSERTS, MAXIMUM 0.27 K-FACTOR AT 75 DEG F MEAN TEMPERATURE SIMILAR TO MANVILLE HI-LO TEMP INSULATION INSERTS.

4) TYPE P-6: MINIMUM 6 LB MOLDED FOAMED PLASTIC. MAXIMUM 0.27 K-FACTOR AT 75 DEG F MEAN TEMPERATURE. MAXIMUM 0.17 PERMEANCE. SIMILAR TO ARMSTRONG ARMAFLEX II.

Property of NY Engineers

DESIGN PROFESSIONAL
NY ENGINEERS
382 NE 191st Street Suite 49674
MIAMI, FL 33179
(786)-788-0295
ny-engineers.com

DATES

PROJECT

TITLE

MECHANICAL SPECIFICATIONS

SHEET NO.

GENERAL NOTES:

A. ALL WORK SHALL COMPLY WITH ALL LOCAL AND STATE CODES AND AUTHORITIES HAVING JURISDICTION.

B. THE CONTRACTOR SHALL SECURE AND PAY FOR ALL REQUIRED PERMITS AND ARRANGE ALL REQUIRED INSPECTIONS.

C. THE CONTRACTOR SHALL COORDINATE HIS WORK WITH OTHER CONTRACTORS AND TRADES.

D. THESE DRAWINGS, AS PREPARED, ARE DIAGRAMMATIC BUT SHALL BE FOLLOWED AS CLOSELY AS CONSTRUCTION OF THE PROJECT AND THE WORK OF THE TRADES WILL PERMIT. EQUIPMENT LOCATIONS INDICATED ARE APPROXIMATE. COORDINATE EXACT LOCATIONS AND REQUIRED CLEARANCES WITH EQUIPMENT SUPPLIER AND ALL TRADES PRIOR TO INSTALLATION.

E. THE CONTRACTOR SHALL FURNISH AND INSTALL ALL THE EQUIPMENT INDICATED WITHIN THE MECHANICAL DRAWINGS UNLESS OTHERWISE NOTED. ALL EQUIPMENT SHALL BE UL LISTED. VERIFY LOCATION AND DIMENSIONS IN THE FIELD PRIOR TO FABRICATION AND / OR INSTALLATION.

F. EACH UNIT GENERATING CONDENSATE SHALL BE PROVIDED WITH A CONDENSATE DRAIN WITH EXTERNAL, 4" DEEP P-TRAP. EXTEND DRAIN TO A ROOF MOUNTED SPLASH PAD OR AN ACCEPTABLE LOCATION REQUIRED BY CODE.

G. DUCT SIZES SHOWN ON DRAWINGS ARE CLEAR INSIDE DIMENSION.

H. ALL DUCTWORK SHALL BE FABRICATED, INSTALLED, SEALED, AND INSULATED PER THE LATEST ISSUE OF SMACNA LOW-VELOCITY DUCT MANUAL.

I. ALL FLEX DUCT SHALL BE TESTED IN ACCORDANCE WITH UL 181. AND DUCT SHALL BE LISTED AND LABELED AS CLASS 1. FLEXIBLE AIR CONNECTORS SHALL BE LIMITED IN LENGTH TO 5 FEET AS PER LOCAL CODE.

J. THE CONTRACTOR SHALL COORDINATE DIFFUSER LOCATIONS ON SITE WITH THE MOST RECENT REFLECTED CEILING PLAN.

K. THE CONTRACTOR IS TO MAKE ALL LOW-VOLTAGE WIRING CONNECTIONS FOR ALL HVAC EQUIPMENT INCLUDING TEMPERATURE CONTROLS, ROOF TOP UNITS, SMOKE DETECTORS AND CONTACTOR PANEL.

L. THE ENTIRE INSTALLATION SHALL BE GUARANTEED FREE OF DEFECTS AND CONTRACTOR SHALL REPAIR AND / OR REPLACE ANY DEFECTIVE MATERIALS OR EQUIPMENT AT NO COST TO THE OWNER FOR A MINIMUM PERIOD OF ONE YEAR FROM THE DATE OF ACCEPTANCE BY ARCHITECT OR ENGINEER.

M. ALL WORK SHALL BE SUBJECT TO THE ACCEPTANCE AND APPROVAL OF THE ARCHITECT AND OWNER. THE ARCHITECT SHALL BE NOTIFIED OF ANY AND ALL DISCREPANCIES BETWEEN FIELD CONDITIONS AND THE CONTRACT DOCUMENTS BEFORE PROCEEDING WITH THAT PORTION OF THE WORK. FAILURE OF PROPER NOTIFICATION DOES NOT RELIEVE THE CONTRACTOR. THE CONTRACTOR SHALL CORRECT ANY AND ALL WORK ARISING FROM SUCH FAILURE TO COORDINATE DISCREPANCIES TO THE SATISFACTION OF THE ARCHITECT WITHOUT ADDITIONAL COST TO THE OWNER.

N. THE CONTRACTOR SHALL, UPON COMPLETION OF PROJECT, PERFORM A COMPLETE TEST AND BALANCE OF ALL EQUIPMENT. PROVIDE A WRITTEN REPORT TO THE ARCHITECT. ALL CAPACITIES MUST BE SET TO WITHIN ±10% OF AMOUNTS INDICATED ON THE FLOOR PLAN AND SCHEDULES.

O. PROVIDE FIRE OR FIRE+SMOKE DAMPER WHEREVER DUCTS ARE CROSSING FIRE/SMOKE RATED WALLS/ BARRIERS. COORDINATE WITH ARCHITECTURAL DRAWING FOR FIRE RATING OF THE WALLS.

P. PROVIDE VOLUME DAMPER IN ACCESSIBLE CEILING AND PROVIDE CORD OPERATED DAMPER IN INACCESSIBLE CEILING.

Q. FLEXIBLE CONNECTION SHALL BE INSTALLED BETWEEN EQUIPMENT AND CONNECTING DUCTWORK.

R. PROVIDE INTERNAL INSULATION FOR ALL EXPOSED DUCTWOR AND EXTERNAL FOR DUCTWORK IN CONCEALED AREA.

S. PROVIDE VOLUME CONTROL DAMPER AND MOTORIZED DAMPER ON ALL OUTSIDE AIR CONNECTIONS.

KEYED NOTES:

1. EXTEND FULL SIZE SUPPLY & RETURN DUCTWORK FROM HVAC EQUIPMENT TO SPACE. EXTEND AS SHOWN. ACOUSTICALLY LINE THE FIRST 10'-0" OF BOTH SUPPLY AND RETURN MAIN DUCTS.
2. CONNECT 3/4" CD FROM AC TO NEAREST PLUMBING DRAIN WITH AIR GAP FITTING. INSTALL CONDENSATE DRAIN WITH WITH SLOPE OF NOT LESS THAN 1/8" PER FOOT TOWARDS NEAREST APPROVED PLUMBING FIXTURE. PROVIDE CONDENSATE PUMP AS/IF REQUIRED.
3. INSTALL REFRIGERANT PIPING BETWEEN INDOOR AND OUTDOOR UNIT AS PER MANUFACTURERS RECOMMENDATIONS. PROVIDE INSULATION TO REF PIPING AS PER ENERGY CONSERVATION CODE. COORDINATE WITH BASE BUILDING ENGINEER FOR PIPE ROUTING AND RISER LOCATION. NOTIFY THE ENGINEER OF ANY DISCREPANCY BEFORE COMMENCING BID.
4. COORDINATE FINAL LOCATION OF EQUIPMENTS WITH ARCHITECTURAL / STRUCTURAL DRAWINGS.
5. PROVIDE NEW 7-DAY PROGRAMMABLE THERMOSTAT WITH REMOTE SENSOR. MOUNT ON WALL AT 48" A.F.F. COORDINATE EXACT LOCATION WITH ARCHITECT AND OWNER PRIOR TO ROUGH-IN. PROVIDE LOCKABLE COVER.
6. INTERLOCK MD WITH RESPECTIVE UNITS.
7. INSTALL OUTDOOR CONDENSING UNITS ON THE FLOOR LEVEL WITH ALL REQUIRED ACCESSORIES. COORDINATE EXACT LOCATION IN FIELD. COORDINATE FINAL LOCATION WITH OWNER/LANDLORD.
8. PROVIDE SUPPORTS AS REQUIRED.COORDINATE WITH STRUCTURAL ENGINEER.
9. COORDINATE WITH BASE BUILDING ENGINEER FOR PIPE ROUTING AND RISER LOCATION.
10. REFRIGERANT PIPE SIZES SHALL BE COORDINATED WITH THE EQUIPMENT MANUFACTURER.

SEQUENCE OF OPERATION:

SEQUENCE OF OPERATION FOR EF, OAF, AC AND MD					
CONDITION	EF-1	OAF-1 / MD-4	AC-1 / MD-1	AC-2 + MD-2	AC-3 + MD-3
UNOCCUPIED (SCHEDULE = OFF)	OFF	OFF / CLOSE	ON / OPEN	ON / OPEN	ON / OPEN
OCCUPIED (SCHEDULE = ON)	ON	ON	ON / OPEN	ON / OPEN	ON / OPEN

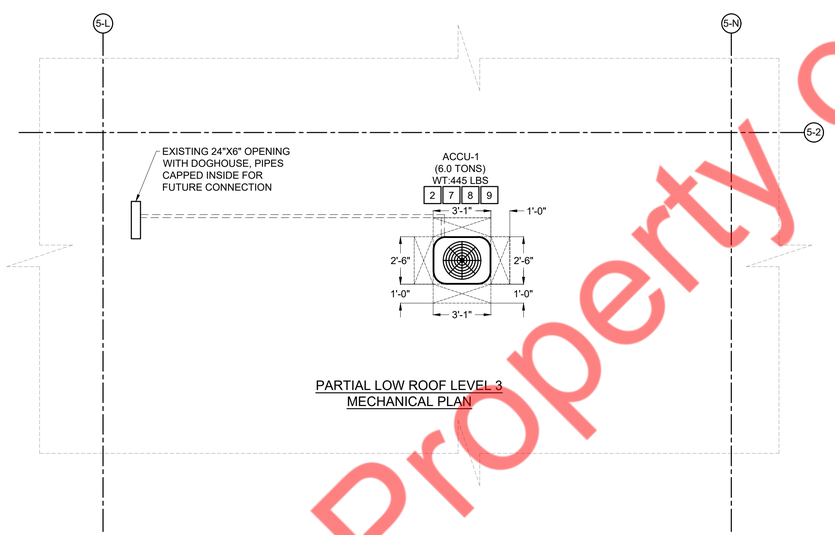

PARTIAL LOW ROOF LEVEL 3
MECHANICAL PLAN

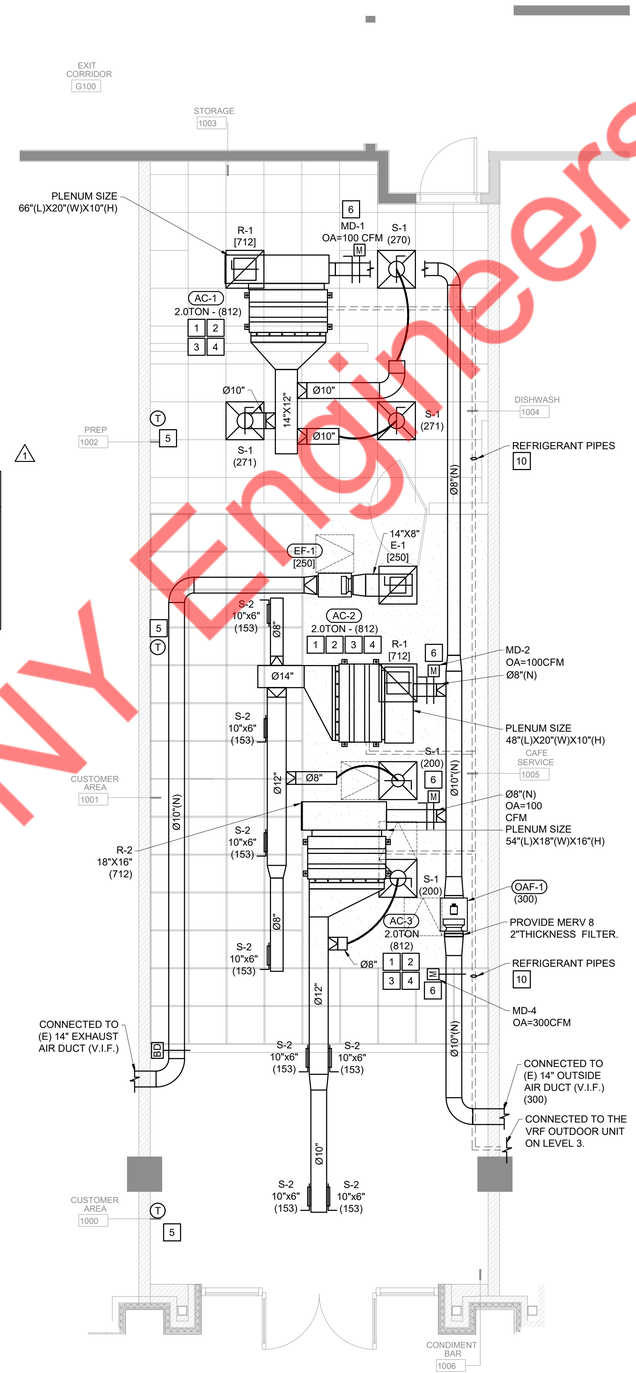

CONTRACTOR NOTES:-

1. CONTRACTOR SHALL VERIFY ALL CLEARANCES AND AVAILABLE SPACE FOR HVAC UNITS AND DUCTWORK PRIOR TO ORDERING AND/OR FABRICATING MATERIAL.
2. THE CONTRACTOR SHALL VERIFY IF A COMMON FRESH AIR FAN IS PROVIDED FOR THE BUILDING. IF NOT, A DEDICATED FRESH AIR FAN MUST BE INSTALLED FOR OUR SPACE.

1 M1.0 MECHANICAL FLOOR PLAN
SCALE: 1/4"=1'-0"

0 5 10 15
SCALE BAR 1/4"=1'-0"

DESIGN PROFESSIONAL
NY ENGINEERS
382 NE 191st Street Suite 49674
MIAMI, FL 33179
(786)-788-0295
ny-engineers.com

DATES

LL COMMENTS #1 2025.08.20

PROJECT

TITLE

MECHANICAL FLOOR PLAN

SHEET NO.

M1.0

Property of NY Engineers

1 M2.0 NOT USED
SCALE: N.T.S.

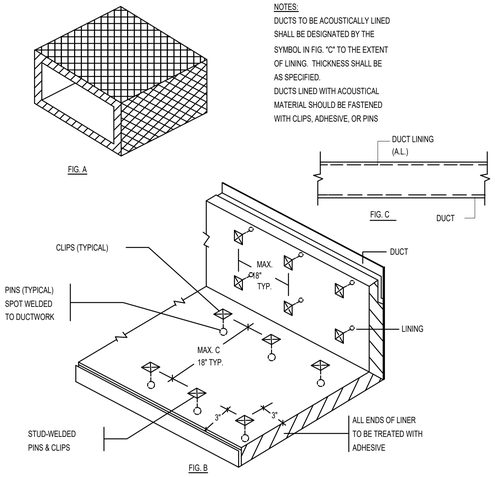

2 M2.0 ACOUSTIC LINING DETAIL
SCALE: N.T.S.

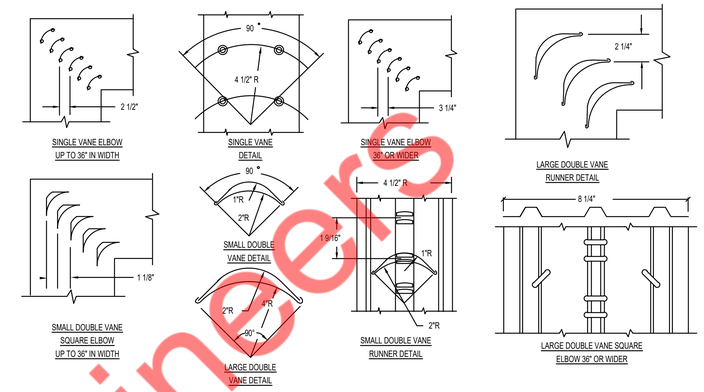

3 M2.0 LOW VELOCITY DUCTWORK ELBOW
SCALE: N.T.S.

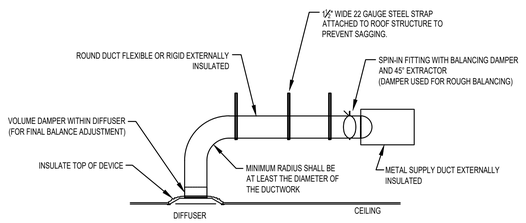

4 M2.0 DIFFUSER CONNECTION DETAILS
SCALE: N.T.S.

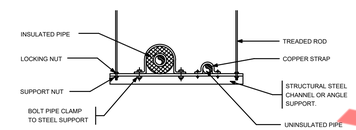

TYPICAL TRAPEZE HANGER SUPPORT

PIPE HANGER ROD AND SPACING SCHEDULE

NOMINAL PIPE OR TUBE SIZE - INCHES	5/8	3/4	7/8	1	1 1/2	2	2 1/2
HANGER ROD SIZES INCHES	3/8	3/8	3/8	3/8	3/8	3/8	3/8
MAX. SPACING BETWEEN PIPE SUPPORTS - FEET	-	6	6	7	9	10	11
MAX. SPACING BETWEEN CU. TUBE SUPPORTS-FT.	6	6	6	6	8	9	10

NOTES : TRAPEZE HANGER SPACING SHALL BE BASED ON SPACING OF SMALLEST PIPE ON TRAPEZE. TRAPEZE SHALL BE DESIGNED WITH A FACTOR OF SAFETY OF 5 FOR CENTER OF SPAN CONCENTRATED LOAD.

5 M2.0 METHOD OF HANGING REFRIGERANT PIPING
SCALE: N.T.S.

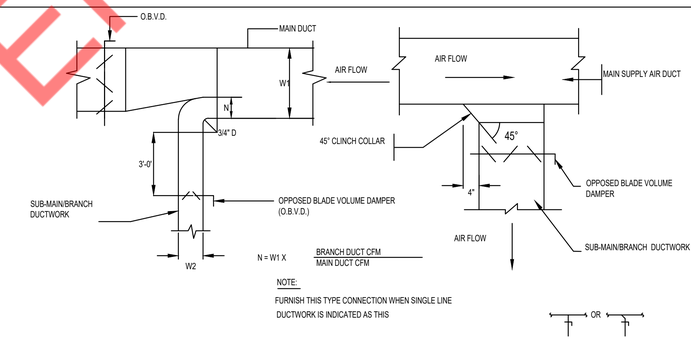

6 M2.0 METHOD OF HANGING REFRIGERANT PIPING
SCALE: N.T.S.

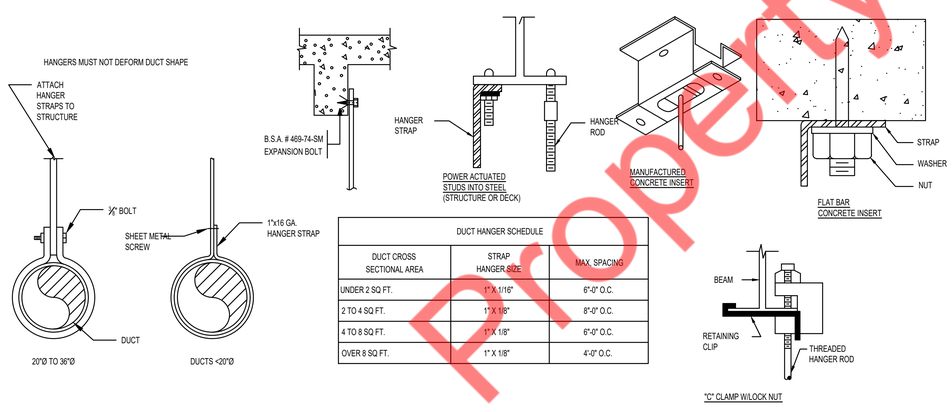

DUCT HANGER SCHEDULE

DUCT CROSS SECTIONAL AREA	STRAP HANGER SIZE	MAX. SPACING
UNDER 2 SQ FT.	1" X 1/16"	6'-0" O.C.
2 TO 4 SQ FT.	1" X 1/8"	8'-0" O.C.
4 TO 8 SQ FT.	1" X 1/8"	6'-0" O.C.
OVER 8 SQ FT.	1" X 1/8"	4'-0" O.C.

7 M2.0 TYPICAL DUCT HANGING DETAIL
SCALE: N.T.S.

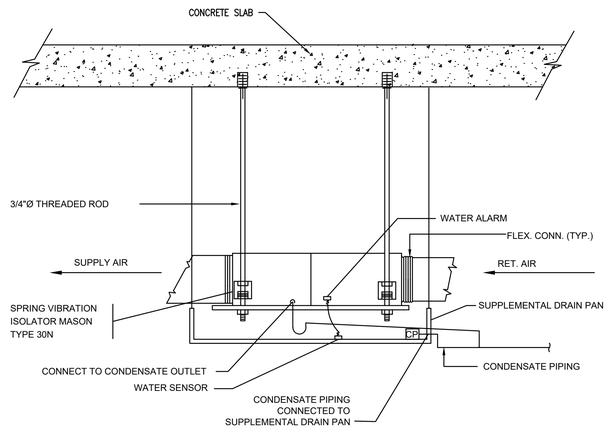

8 M2.0 A.C. UNIT INSTALLATION DETAIL
SCALE: N.T.S.

Property of NY Engineers

DESIGN PROFESSIONAL
NY ENGINEERS
382 NE 191st Street Suite 49674
MIAMI, FL 33179
(786)-788-0295
ny-engineers.com

DATES

HEALTH COMMENTS #2 2025.09.01

PROJECT

TITLE

MECHANICAL DETAILS

SHEET NO.

M2.0

AIR HANDLING (INDOOR) UNIT SCHEDULE

MAKE:- LENNOX (OR EQUIVALENT)

UNIT TAG	LOCATION	AREA SERVED	TYPE	NOMINAL CAP. (TON)	COOLING MBH	MAX. CFM	OUTSIDE AIR	HEATING CAPACITY INPUT(MBH)	MAX. RATED ESP. (IN. WG)	ELECTRICAL DATA PH/VOLT/HZ	MCA (A)	MOP (A)	DIMENSIONS (WXHXD) (IN.)	PIPE SIZE (INCH) LIQ.	SUCTION	DRAIN (ID)	WEIGHT (LBS.)	MODEL NO.
AC-1	GROUND FLOOR	SEE PLAN	CEILING-CONCEALED (DUCTED)	2.0	24	812	100	27.0	0.8	1/208-230/60	2.41	15	47-1/4 x 9-13/16 x 27-9/16	3/8"	5/8"	3/4"	85	VHIC024S4-4P (OR EQUIVALENT)
AC-2	GROUND FLOOR	SEE PLAN	CEILING-CONCEALED (DUCTED)	2.0	24	812	100	27.0	0.8	1/208-230/60	2.41	15	47-1/4 x 9-13/16 x 27-9/16	3/8"	5/8"	3/4"	85	VHIC024S4-4P (OR EQUIVALENT)
AC-3	GROUND FLOOR	SEE PLAN	CEILING-CONCEALED (DUCTED)	2.0	24	812	100	27.0	0.8	1/208-230/60	2.41	15	47-1/4 x 9-13/16 x 27-9/16	3/8"	5/8"	3/4"	85	VHIC024S4-4P (OR EQUIVALENT)

NOTES FOR INDOOR UNITS

1. SUPPLY AIR CFM BASED ON HIGH SPEED.
2. PROVIDE MOUNTING BRACKETS WITH MANUFACTURER RECOMMENDED VIBRATION ISOLATORS AND ALL ASSOCIATED ACCESSORIES.
3. ALL REFRIGERANT PIPING TO BE SIZED PER MANUFACTURERS RECOMMENDATIONS.
4. INDOOR UNIT ACCESS PANEL FIELD-PROVIDED AS REQUIRED. COORDINATE WITH ARCHITECT.
5. PROVIDE MINIMUM FILTER OF MERV 13.
6. CONTRACTOR SHALL PROVIDE A LONG LINE SET FOR REFRIGERANT PIPING IN THE EVENT THAT TOTAL REFRIGERANT LENGTH EXCEEDS THE MANUFACTURER'S STANDARD RECOMMENDED LENGTH.
7. PROVIDE UNITS WITH 7 DAYS PROGRAMMABLE HEATING AND COOLING WALL MOUNTED CONTROLLERS BY THE UNIT MANUFACTURER.
8. PROVIDE WATER LEVEL DETECTING DEVICE THAT WILL SHUT OFF THE UNIT IN THE EVENT THE PRIMARY DRAIN IS BLOCKED.

CONDENSING (OUTDOOR) UNITS SCHEDULE

MAKE:- LENNOX (OR EQUIVALENT)

UNIT TAG	LOCATION	INDOOR UNIT SERVED	COOLING MBH	HEATING MBH	UNIT DIMENSIONS IN. (WxHxD)	WEIGHT (LBS)	PIPING DIMENSION LIQUID-HI PRESSURE (INCH)	GAS HIGH-PRESSURE (INCH)	ELECTRICAL PH/VOLT/HZ	MCA (A)	MOP (A)	IEER	EER	MODEL NO.
ACCU-1	SEE PLAN	AC-1, 2 & 3	72	81	36-5/8 x 66-3/4 x 30-1/8	445	3/8"	3/4"	3/460/60	15	20	25.5	11.85	VPC072S4M-4G (OR EQUIVALENT)

NOTES: OUTDOOR UNITS (VRF HEAT PUMP UNITS)

1. UNIT SHALL HAVE TEN YEAR EXTENDED WARRANTY FOR COMPRESSORS/PARTS.
2. PROVIDE COMPRESSOR CYCLE PROTECTOR.
3. PROVIDE STEEL RAILS AND VIBRATION ISOLATORS FOR CONDENSER MOUNTING.
4. STEEL RAILS TO BE PROVIDED BY MECH. CONTRACTOR.
5. CONTRACTOR SHALL PROVIDE A LONG LINE SET FOR REFRIGERANT PIPING IN THE EVENT THAT TOTAL REFRIGERANT LENGTH EXCEED THE MANUFACTURER'S STANDARD RECOMMENDED LENGTH.

SCHEDULE OF GRILLES/DIFFUSER

MAKE: TITUS

TAG	TYPE	MODEL NO.	DIMENSION (IN)	MOUNTING	FRAME TYPE	MAX NC dBA
S-1	SUPPLY	OMNI	24X24	SAT / HARD CEILING	LAY IN	20
S-2	SUPPLY	S300F	10X6	DUCT MOUNTED	LAY IN	20
R-1	RETURN	50FF	24X24	SAT / HARD CEILING	LAY IN	20
R-2	RETURN	23R	18X16	DUCT MOUNTED	SURFACE MOUNT	30
E-1	EXHAUST	50FF	24X24	SAT / HARD CEILING	LAY IN	25

NOTES FOR DIFFUSERS

1. ALL GRILLES : CONTRACTOR SHALL COORDINATE WITH LATEST ARCHITECTURAL REFLECTED CEILING PLANS TO ENSURE PROPER AIR DEVICE BORDER SELECTION.

2. COORDINATE COLOR/FINISH WITH ARCHITECT.

FOR ROUND NECK DIFFUSERS:

FOR ROUND DIFFUSER NECK SIZE	FOR SQUARE DIFFUSER NECK SIZE
6" DIA: 0-100 CFM	6"X6" : 0 - 115 CFM
8" DIA: 101-175 CFM	8"X8" : 116 - 220 CFM
10" DIA: 176-275 CFM	10"X10" : 221 - 350 CFM
12" DIA: 276-395 CFM	12"X12" : 351 - 520 CFM
14" DIA: 396-535 CFM	14"X14" : 521 - 730 CFM
15" DIA:536-750 CFM	16"X16" : 731 - 840 CFM
	18"X18" : 840 - 1035 CFM
	20"X20" : 1036 - 1285 CFM
	22"X22" : 1286 - 1570 CFM

VENTILATION CALCULATION AS PER CALIFORNIA ENERGY CODE 2022 - TABLE 120.1-A & 120.1-B

ROOM NAME	AREA (SQ.FT.)	AREA OUTDOOR AIR RATE CFM/SQ.FT	REQUIRED OA (CFM)	PROVIDED OA (CFM)	EXHAUST AIRFLOW RATE (CFM/SQ.FT OR CFM/UNIT)	TOTAL EXHAUST (CFM)	TOTAL EXHAUST (CFM)
WAITING AREA	511	0.25	128	300	0	0	0
SERVICE AREA	211	0.25	53		0	0	0
PREP AREA	143	0.15	21		0.7	100	250
STORAGE ROOM	152	0	0		0	0	0
TOTAL	**1016**	**-**	**202**	**300**	**-**	**100**	**250**

AIR BALANCE

UNIT	AREA SERVED	SUPPLY AIR (CFM)	OUTSIDE AIR (CFM)	RETURN AIR (CFM)	EXHAUST AIR(CFM)
AC-1	SEE PLAN	812	100	712	0
AC-2	SEE PLAN	812	100	712	0
AC-3	SEE PLAN	812	100	712	0
EXIST EX	SEE PLAN	0	0	0	250
TOTAL:		2436	300	2136	250
BUILDING PRESSURE:			50	POSITIVE	

NOTES:

1. CONTRACTOR TO ADJUST MOTORIZED DAMPER ON OUTSIDE AIR TAP TO PROVIDE OUTSIDE AIR AS MENTIONED IN ABOVE TABLE.

FAN SCHEDULES

UNIT ID	MANUFACTURER	MODEL	CFM	ESP(IN W.G.)	RPM	HP	VOLT/HZ/PH	MCA	MOP	WEIGHT (LBS)
EF-1	GREENHECK	SQ-98-VG	250	1	1674	1/4	208/60/1	2.6	15	50
OAF-1	GREENHECK	BSQ-80	300	1	1716	1/4	460/60/3	1.4	15	80

NOTES OF EF-1:

1	UL 705 LISTED (HEAT OR STEAM)
2	PRE-WIRED DISCONNECT SWITCH
3	PROVIDE PRE-WIRED SOLID STATE SPEED CONTROLLER
4	FURNISHED WITH DAMPER TRAY
5	GRAVITY BACKDRAFT DAMPER
6	COORDINATE WITH OWNER FOR FINAL SELECTION OF FANS.

NOTES FOR OAF:

1	PROVIDE ALL MANUFACTURER RECOMMENDED ACCESSORIES.
2	PROVIDE MERV 8 2"THICKNESS FILTER, CORIDINATE WITH MANUFACTURER.
3	PROVIDE WITH DISCONNECT. REFER TO ELECTRICAL PLANS FOR RATINGS & COORDINATE WITH E.C.
4	VARIABLE SPEED CONTROL.
5	THERMAL OVERLOAD PROTECTION.
6	COORDINATE WITH OWNER FOR FINAL SELECTION OF FANS.
7	INTERLOCK WITH AC-1, AC-2 AND AC-3

Property of NY Engineers

DESIGN PROFESSIONAL
NY ENGINEERS
382 NE 191st Street Suite 49674
MIAMI, FL 33179
(786)-788-0295
ny-engineers.com

DATES

LL COMMENTS #1 2025.08.20

PROJECT

TITLE

MECHANICAL SCHEDULE

SHEET NO.

M2.1

STATE OF CALIFORNIA
Mechanical Systems
CALIFORNIA ENERGY COMMISSION

CERTIFICATE OF COMPLIANCE		NRCC-MCH-E
This document is used to demonstrate compliance for mechanical systems that are within the scope of the permit application and are demonstrating compliance using the prescriptive path outlined in 140.4, or 141.0(b)2 for alterations.		
Project Name: Kona Island Coffee	**Report Page:**	**(Page 1 of 9)**
Project Address: 2565 California St. # 84 Mountain View Ca. 94040	**Date Prepared:**	2025-07-21T05:41:21-04:00

A. GENERAL INFORMATION

01	Project Location (city)	Mountain View, CA	04	Total Conditioned Floor Area	1016
02	Climate Zone	4	05	Total Unconditioned Floor Area	0
03	Occupancy Types Within Project:		06	# of Stories (Habitable Above Grade)	1

- Restaurant

B. PROJECT SCOPE

This table includes mechanical systems or components that are within the scope of the permit application and are demonstrating compliance using the prescriptive path outlined in 140.4, 170.2(b) or 141.0(b)2 and 180.2(b)2 for alterations.

01	02	03
Air System(s)	Wet System Components	Dry System Components
☒ Heating Air System	☐ Water Economizer	☐ Air Economizer
☒ Cooling Air System	☐ Pumps	☐ Electric Resistance Heat
Mechanical Controls	☐ System Piping	☒ Fan Systems
☒ Mechanical Controls (existing to remain, altered or new)	☐ Cooling Towers	☒ Ductwork (existing to remain, altered or new)
	☐ Chillers	☒ Ventilation
	☐ Boilers	☐ Zonal Systems/ Terminal Boxes

STATE OF CALIFORNIA
Mechanical Systems
CALIFORNIA ENERGY COMMISSION

CERTIFICATE OF COMPLIANCE		NRCC-MCH-E
Project Name: Kona Island Coffee	**Report Page:**	**(Page 2 of 9)**
	Date Prepared:	2025-07-21T05:41:21-04:00

C. COMPLIANCE RESULTS

Table C will indicate if the project data input into the compliance document is compliant with mechanical requirements. This table is not editable by the user. If this table says "DOES NOT COMPLY" or "COMPLIES with Exceptional Conditions" refer to Table D., or the table indicated as not compliant for guidance.

01		02		03		04		05		06		07		08	09
System Summary 110.1, 110.2, 140.4, 170.2(c)	AND	Pumps 140.4(k), 170.2(c)4I	AND	Fans/ Economizers 140.4(c), 140.4(e), 170.2(c)	AND	System Controls 110.2, 120.2, 140.4(f), 170.2(c)	AND	Ventilation 120.1, 160.2	AND	Terminal Box Controls 140.4(d), 170.2(c)4B	AND	Distribution 120.3, 140.4(l), 160.2, 160.3	AND	Cooling Towers 110.2(e)2	Compliance Results
(See Table F)		(See Table G)		(See Table H)		(See Table I)		(See Table J)		(See Table K)		(See Table L)		(See Table M)	
Yes	AND		AND	Yes	AND	Yes	AND	Yes	AND		AND	Yes	AND		COMPLIES with Exceptional Conditions
Mandatory Measures Compliance (See Table Q for Details)												COMPLIES			

D. EXCEPTIONAL CONDITIONS

This table is auto-filled with uneditable comments because of selections made or data entered in tables throughout the form.

The permit applicant has indicated on Table J that ventilation calculations have been attached or included elsewhere on the plans.

E. ADDITIONAL REMARKS

This table includes remarks made by the permit applicant to the Authority Having Jurisdiction.

F. HVAC SYSTEM SUMMARY (DRY & WET SYSTEMS)

Space Conditioning System Information

01	02	03	04	05	06
System Name	Quantity	System Serving	System Status	Space Type	Utilizing Recovered Heat
ACCU-1	1	Single zone	New/ Addition	All Other Occupancies	☐

STATE OF CALIFORNIA
Mechanical Systems
CALIFORNIA ENERGY COMMISSION

CERTIFICATE OF COMPLIANCE		NRCC-MCH-E
Project Name: Kona Island Coffee	**Report Page:**	**(Page 3 of 9)**
	Date Prepared:	2025-07-21T05:41:21-04:00

F. HVAC SYSTEM SUMMARY (DRY & WET SYSTEMS)

Dry System Equipment Sizing (includes air conditioners, condensers, heat pumps, VRF, furnaces and unit heaters and DOAS systems)

01	02	03	04	05	06	07	08	09	10	11
Name or Item Tag	Equipment Category per Tables 110.2, 140.4(a)2 and 170.2(c)3aii	Equipment Type per Tables 110.2 and Title 20	Smallest Size Available[1] 140.4(a) and 170.2(c)1	Equipment Sizing per Mechanical Schedule (kBtu/h) 140.4(a&b), 170.2(c)1 & 170.2(c)2						
				Heating Output[2,3]			Cooling Output[2,3]		Load Calculations[3,4]	
				Per Design (kBtu/h)	Rated (kBtu/h)	Supp. Heating Output (kBtu/h)	Sensible Per Design (kBtu/h)	Rated (kBtu/h)	Total Heating Load (kBtu/h)	Total Sensible Cooling Load (kBtu/h)
ACCU-1	Variable Refrigerant Flow	VRF heat pump, air cooled	Yes	34.5	81	0	66.9	72	34.5	66.9

[1]FOOTNOTES: Equipment shall be the smallest size, within the available options of the desired equipment line, necessary to meet the design heating and cooling loads of the building per 140.4(a) and 170.2(c)1. Healthcare facilities are excepted.
[2]It is common practice to show rated output capacity on the equipment schedule. Sensible cooling output comes from specification sheet tables.
[3] If equipment is heating only, leave cooling output and load blank. If equipment is cooling only, leave heating output and load blank.
[4] Authority Having Jurisdiction may ask for load calculations used for compliance per 140.4(b) and 170.2(c).

Dry System Equipment Efficiency (Other than Package Terminal Air Conditioners (PTAC) and Package Terminal Heat Pumps (PTHP), DX-DOAS and Dual Fuel Heat Pumps)

01	02	03	04	05	06	07	08	09
		Heating Mode				Cooling Mode		
Name or Item Tag	Size Category (Btu/h)	Rating Condition (°F)	Efficiency Unit	Minimum Efficiency Required per Tables 110.2 / Title 20	Design Efficiency	Efficiency Unit	Minimum Efficiency Required per Tables 110.2 / Title 20	Design Efficiency
ACCU-1	>=65,000 and <135,000	47 °Fdb/ 43 °Fwb OSA	COP	3.3	3.86	EER IEER	11 14.6	11.85 25.5

G. PUMPS

This section does not apply to this project.

STATE OF CALIFORNIA
Mechanical Systems
CALIFORNIA ENERGY COMMISSION

CERTIFICATE OF COMPLIANCE		NRCC-MCH-E
Project Name: Kona Island Coffee	**Report Page:**	**(Page 4 of 9)**
	Date Prepared:	2025-07-21T05:41:21-04:00

H. FAN SYSTEMS & AIR ECONOMIZERS

This table is used to demonstrate compliance with prescriptive requirements found in 140.4(c), 140.4(e), 140.4(m), 170.2(c)3, and 170.2(c)4A for fan systems. Fan systems serving only process loads are exempt from these requirements and do not need to be included in Table H.

System Name	AC-1,2&3	Quantity	3	Fan System Status	New	System Zoning	all other systems	Serving Dwelling Units	Not Serving Dwelling Units	Fan System Airflow (cfm)	812	Site Elevation	39	Economizer	NA: <=33 kBtu/h cooling
01	02	03	04			05		06	07	08	09			10	11
									Allowance		Design				
Fan Name or Item Tag	Fan Type	Qty	Component			Airflow through Component (%)		Water Gauge (w.g)	Component Allowance (watt/cfm)	Fan Allowance (watt/cfm)[1]	Design Electrical Input Power Method			Motor Nameplate Horsepower	Fan Electrical Input Power (kW)
AC-1,2&3	Supply	3	Hydronic/DX cooling coil or heat pump coil			100			0.139	0.139	Manufacturer provided				0.29
Supply Fan Base Allowance (watt/cfm)			Exhaust/Return/Relief/Transfer Fan Base Allowance(watt/cfm)						Fan System Allowance (kW)[3]					Fan System Electrical Input Power (kW)	0.87

[1] FOOTNOTES: Fans serving spaces with design background noise goals below NC35
[2] Low-turndown single-zone VAV fan system must be capable of and configured to reduce airflow to 50 percent of design airflow and use no more than 30 percent of the design wattage at that airflow. No more than 10 percent of the design load served by the equipment shall have fixed loads.
[3] Fan system allowance includes fan system base allowance.
[4] Filter pressure loss can only be counted once per fan system.
[5] Complex Fan System means a fan system that combines a single cabinet fan system with other supply fans, exhaust fans, or both.
[6] Computer room economizers must meet requirements of 140.9(a) and will be documented on the NRCC-PRC-E document..

H. EXHAUST AIR HEAT RECOVERY 140.4(q), 170.2(c)4O

01	02	03	04	05	06	07	08	09	10	11

STATE OF CALIFORNIA
Mechanical Systems
CALIFORNIA ENERGY COMMISSION

CERTIFICATE OF COMPLIANCE		NRCC-MCH-E
Project Name: Kona Island Coffee	**Report Page:**	**(Page 5 of 9)**
	Date Prepared:	2025-07-21T05:41:21-04:00

H. EXHAUST AIR HEAT RECOVERY 140.4(q), 170.2(c)4O

Fan System Name	Qty	Hours of Operation per Year	Design Supply Airflow Rate	Outdoor Airflow	% Outdoor Air at Full Design Airflow	Exemptions to Exhaust Air Heat Recovery Requirement per 140.4(q) & 170.2(c)4O	Exhaust Air Heat Recovery 140.4(q) & 170.2(c)4O	Type Of Heat Recovery Rating	Required Recovery Ratio	Energy Recovery Bypass
AC-1,2&3	3	< 8,000	812	100	12	No Exemptions Apply	Not Required			

Fan Energy Index (FEI)

01	02	03
Name or Item Tag	FEI Exception	FEI
AC-1,2&3	None Applies	1

I. SYSTEM CONTROLS

This table is used to demonstrate compliance with mandatory controls in 110.2 and 120.2 and prescriptive controls in 140.4(f) and (n), 170.2(c)4D 170.2(c)4L or requirements in 141.0(b)2E 180.2(b)2 for altered space conditioning systems.

01	02	03	04	05	06	07	08	09	10
System Name	System Zoning	Conditioned Floor Area Being Served (ft^2)	Thermostats 110.2(b) & (c)[1], 120.2(a) 160.3(a)2A or 141.0(b)2E & 180.2(b)2	Shut-Off Controls 120.2(e) & 160.3(a)2D	Isolation Zone Controls 120.2(g) & 160.3(a)2F	Demand Response 110.12 120.2(b) & 160.3(a)2B	Supply Air Temp. Reset 140.4(f) & 170.2(c)4D	Window Interlocks per 140.4(n) & 170.2(c)4D	Direct Digital Control (DDC) per 120.2
ACCU-1	Single zone	<= 25,000 ft^2	Setback	NA: 7 day per 120.2(e)1	NA: Single Zone	DR Tstat per 110.12	NA: Single Zone	NA: No operable windows	NA: Single Zone

[1]FOOTNOTES: Gravity gas wall heaters, gravity floor heaters, gravity room heaters, non-central electric heaters, fireplaces or decorative gas appliances, wood stoves are not required to have setback thermostats.

STATE OF CALIFORNIA
Mechanical Systems
CALIFORNIA ENERGY COMMISSION

CERTIFICATE OF COMPLIANCE		NRCC-MCH-E
Project Name: Kona Island Coffee	**Report Page:**	**(Page 6 of 9)**
	Date Prepared:	2025-07-21T05:41:21-04:00

J. VENTILATION AND INDOOR AIR QUALITY

This table is used to demonstrate compliance with mandatory ventilation requirements in 120.1 120.2(e)3B 140.4(p) and 140.4(q) for all nonresidential and hotel/motel and d:t24refnolink/160.2, 160.3(a)3D, 170.2(q)4N, 170.2(o)4O for high-rise residential occupancies. For alterations, only ventilation systems being altered within the scope of the permit application need to be documented in this table. In lieu of this table, the required outdoor ventilation rates and airflows may be shown on the plans or the calculations can be presented in a spreadsheet.

01	☒	Check the box if the project is showing ventilation calculations on the plans, or attaching the calculations instead of completing this table.
02	☐	Check this box if the project included Nonresidential, Hotel/Motel Spaces or Multifamily Common Use Spaces
	☐	
03	☐	Check the box if the project is using natural ventilation in any nonresidential or hotel/motel spaces to meet required ventilation rates per 120.1(c)2.

K. TERMINAL BOX CONTROLS

This section does not apply to this project.

L. DISTRIBUTION (DUCTWORK and PIPING)

This table is used to show compliance with mandatory pipe insulation requirements found in 120.3 and mandatory requirements found in 120.4(g) for duct sealing.

01	☐	Insulation shall be protected from damage, including that due to sunlight, moisture, equipment maintenance, and wind. Insulation exposed to weather shall be installed with a cover suitable for outdoor service. Insulation covering chilled water piping and refrigerant suction piping located outside the conditioned space shall have a Class I or Class II vapor retarder. All penetrations and joints of which shall be sealed.

Duct Leakage Testing

The answers to the questions below apply to the following duct systems:	M1.0	**NR/ Common Use:** Duct leakage testing shall not exceed 6% per NA7.5.3 required for these systems?	No

Property of NY Engineers

DESIGN PROFESSIONAL
NY ENGINEERS
382 NE 191st Street Suite 49674
MIAMI, FL 33179
(786)-788-0295
ny-engineers.com

DATES

TITLE

TITLE - 24
(1 OF 2)

SHEET NO.

M3.0

STATE OF CALIFORNIA

Mechanical Systems

CALIFORNIA ENERGY COMMISSION

CERTIFICATE OF COMPLIANCE		NRCC-MCH-E
Project Name: Kona Island Coffee	**Report Page:**	**(Page 7 of 9)**
	Date Prepared:	2025-07-21T05:41:21-04:00

L. DISTRIBUTION (DUCTWORK and PIPING)

			Dwelling Units: Total duct leakage of duct system shall not exceed 12% or duct system to outside shall not exceed 6% per RA3.1.4 required for systems?	---
			Duct leakage testing per CMC Section 603.9.2 required for these systems?	Yes
11	No	The scope of the project includes only duct systems serving healthcare facilities		
12	Yes	Duct system provides conditioned air to an occupiable space for a constant volume, single zone, space-conditioning system.		
13	Yes	The space conditioning system serves less than 5,000 ft^2 of conditioned floor area.		
14	No	The combined surface area of the ducts is more than 25% of the total surface area of the entire duct system:		
15	No	The scope of the project includes extending an existing duct system, which is constructed, insulated or sealed with asbestos.		
16	No	The scope of the project includes an existing duct system that is documented to have been previously sealed as confirmed through field verification and diagnostic testing in accordance with procedures in the Reference Nonresidential Appendix NA2.		
17	Yes	All Ductwork and plenums with pressure class ratings shall be constructed to Seal Class A		
18	No	All ductwork is an extension of an existing duct system		
19	No	Ductwork serving individual dwelling unit		
20		< 25 ft of new or replacement space conditioning ducts installed		
21	R-6	Duct Insulation R-value		
22	No	Ductwork Existing To Remain		
23	No	Duct System Connected To Altered Space Conditioning System		

M. COOLING TOWERS

This section does not apply to this project.

STATE OF CALIFORNIA

Mechanical Systems

CALIFORNIA ENERGY COMMISSION

CERTIFICATE OF COMPLIANCE		NRCC-MCH-E
Project Name: Kona Island Coffee	**Report Page:**	**(Page 8 of 9)**
	Date Prepared:	2025-07-21T05:41:21-04:00

N. DECLARATION OF REQUIRED CERTIFICATES OF INSTALLATION

Selections have been made based on information provided in previous tables of this document. If any selection needs to be changed, please explain why in Table E Additional Remarks. These documents must be provided to the building inspector during construction and can be found online at https://www.energy.ca.gov/programs-and-topics/programs/building-energy-efficiency-standards/2022-building-energy-efficiency-4

Form/Title
NRCI-MCH-01-E - Must be submitted for all buildings

O. DECLARATION OF REQUIRED CERTIFICATES OF ACCEPTANCE

Selections have been made based on information provided in previous tables of this document. If any selection needs to be changed, please explain why in Table E Additional Remarks. These documents must be provided to the building inspector during construction and can be found online at https://www.energy.ca.gov/programs-and-topics/programs/building-energy-efficiency-standards/2022-building-energy-efficiency-4

Form/Title	Systems/Spaces To Be Field Verified
NRCA-MCH-02-A - Outdoor Air must be submitted for all newly installed HVAC units. Note: MCH-02-A can be performed in conjunction with MCH-07-A Supply Fan VFD Acceptance (if applicable) since testing activities overlap.	
NRCA-MCH-03-A - Constant Volume Single Zone HVAC NOTE: This form does not automatically move to "Yes'. If Constant Volume Single Zone HVAC Systems are included in the scope, permit applicant should move this form to "Yes".	ACCU-1

P. DECLARATION OF REQUIRED CERTIFICATES OF VERIFICATION

There are no NRCV forms required for this project.

Q. MANDATORY MEASURES DOCUMENTATION LOCATION

This table is used to indicate where mandatory measures are documented in the plan set or construction documentation.

		01	02
Compliance with Mandatory Measures documented through MCH Mandatory Measures Note Block	Yes	Plan sheet or construction document location	M0.1 TO M2.1

STATE OF CALIFORNIA

Mechanical Systems

CALIFORNIA ENERGY COMMISSION

CERTIFICATE OF COMPLIANCE		NRCC-MCH-E
Project Name: Kona Island Coffee	**Report Page:**	**(Page 9 of 9)**
Project Address: 2565 California St. # 84 Mountain View Ca. 94040	**Date Prepared:**	2025-07-21T05:41:21-04:00

DOCUMENTATION AUTHOR'S DECLARATION STATEMENT

I certify that this Certificate of Compliance documentation is accurate and complete.

Documentation Author Name: MICHAEL TOBIAS	Documentation Author Signature:
Company: NY-ENGINEERS	Signature Date: 07/23/2025
Address: 382 NE 191 ST, SUITE 49674	CEA/ HERS Certification Identification (if applicable):
City/State/Zip: MIAMI, FLORIDA 33179	Phone:

RESPONSIBLE PERSON'S DECLARATION STATEMENT

I certify the following under penalty of perjury, under the laws of the State of California:

1. The information provided on this Certificate of Compliance is true and correct.
2. I am eligible under Division 3 of the Business and Professions Code to accept responsibility for the building design or system design identified on this Certificate of Compliance (responsible designer)
3. The energy features and performance specifications, materials, components, and manufactured devices for the building design or system design identified on this Certificate of Compliance conform to the requirements of Title 24, Part 1 and Part 6 of the California Code of Regulations.
4. The building design features or system design features identified on this Certificate of Compliance are consistent with the information provided on other applicable compliance documents, worksheets, calculations, plans and specifications submitted to the enforcement agency for approval with this building permit application.
5. I will ensure that a completed signed copy of this Certificate of Compliance shall be made available with the building permit(s) issued for the building, and made available to the enforcement agency for all applicable inspections. I understand that a completed signed copy of this Certificate of Compliance is required to be included with the documentation the builder provides to the building owner at occupancy.

Responsible Designer Name: MICHAEL TOBIAS	Responsible Designer Signature:
Company: NY ENGINEERS	Date Signed: 07/23/2025
Address: 382 NE 191 ST, SUITE 49674	License: M33750
City/State/Zip: MIAMI, FLORIDA 33179	Phone:

Property of NY Engineers

DESIGN PROFESSIONAL

NY ENGINEERS

382 NE 191st Street Suite 49674
MIAMI, FL 33179
(786)-788-0295
ny-engineers.com

DATES

PROJECT

TITLE

TITLE - 24
(2 OF 2)

SHEET NO.

M3.1

SWITCHES AND CONTROLS

$a	20A SPST SWITCH U.O.N. "a" DENOTES SWITCH'S TAG
$a D	DIMMER SWITCH U.O.N. "a" DENOTES SWITCH'S TAG
$a 3D	THREE WAY DIMMER SWITCH
$ os	WALL OCCUPANCY SENSOR SWITCH
$ T	TIME SWITCH
OS	CEILING MOUNTED OCCUPANCY SENSOR

WIRING SYSTEMS

- - - - - - - -	EXISTING
————	NEW

ANNOTATION

+24"	INDICATES MOUNTING HEIGHT CENTER LINE TO FINISHED FLOOR.
#	KEYED NOTE REFERENCE
1 / E1.0	DETAIL REFERENCE: DETAIL NUMBER INDICATED ON TOP; DRAWING NUMBER INDICATED ON BOTTOM

POWER DISTRIBUTION

	DISTRIBUTION PANELBOARD, SURFACE OR FLUSH MOUNTED.

ELECTRICAL DRAWING LIST

E0.1	ELECTRICAL SYMBOL LIST, ABBREVIATIONS AND GENERAL NOTES
E0.2	ELECTRICAL SPECIFICATIONS (1 OF 2)
E0.3	ELECTRICAL SPECIFICATIONS (2 OF 2)
E1.0	LIGHTING FLOOR PLAN
E2.0	POWER FLOOR PLAN
E3.0	ELECTRICAL DETAILS
E4.0	ELECTRICAL RISER DIAGRAM AND PANEL SCHEDULES
E5.0	TITLE 24

POWER AND TELECOMMUNICATION

J	JUNCTION BOX
	DUPLEX RECEPTACLE, +18" AFF OR AS NOTED.
	SPECIAL RECEPTACLE
	(2) COMBINED DATA & POWER @+45" A.F.F. USE 4" SQUARE BOX W/ STEEL PARTITION SEPARATING POWER/DATA.

MOTORS AND CONTROLS

M	MOTOR AS NOTED WITH LIQUID TIGHT FLEXIBLE CONNECTION WITH JUNCTION BOX AND MOTOR SWITCH.
A	30A NON FUSED DISCONNECT SWITCH, POLES AS NOTED.
B	60A NON FUSED DISCONNECT SWITCH, POLES AS NOTED.
C	100A NON FUSED DISCONNECT SWITCH, POLES AS NOTED.
D	200A NON FUSED DISCONNECT SWITCH, POLES AS NOTED.
$ M	MANUAL MOTOR SWITCH
MD	MOTORIZED DAMPER

APPLICABLE CODES

A. 2022 CALIFORNIA BUILDING CODE

B. 2022 CALIFORNIA MECHANICAL CODE

C. 2022 CALIFORNIA PLUMBING CODE

D. 2022 CALIFORNIA FIRE CODE

E. 2022 CALIFORNIA ELECTRICAL CODE

F. 2022 CALIFORNIA ENERGY CODE.

ELECTRICAL ABBREVIATIONS

A	AMPERES
A/C, AC	AIR CONDITIONING UNIT
AF	AMPERE FRAME/AMP FUSE
AFF	ABOVE FINISHED FLOOR
AS	AMP SWITCH
AIC	AMPS INTERRUPTING CAPACITY
AUTO	AUTOMATIC
AWG	AMERICAN WIRE GAUGE
C	CONDUIT
C/B,CB	CIRCUIT BREAKER
CKT	CIRCUIT
CLG	CEILING
COMM	COMMUNICATION
CT	CURRENT TRANSFORMER
CU	COPPER
°C	DEGREE CELSIUS
°F	DEGREE FAHRENHEIT
DIA	DIAMETER
DISC	DISCONNECT
DN	DOWN
DWG	DRAWING
JB	JUNCTION BOX
KCMIL	ONE THOUSAND CIRCULAR MILS
KV	KILOVOLT
KVA	KILOVOLT-AMPERES
KW	KILOWATTS
LP	LIGHTING PANEL
LTG	LIGHTING
MAX	MAXIMUM
MC	MOTOR CONTROLLER
MCB	MAIN CIRCUIT BREAKER
MER	MECHANICAL EQUIPMENT ROOM
MIN	MINIMUM
MLO	MAIN LUGS ONLY
MTD	MOUNTED
N	NEUTRAL
NE	NEW DEVICE TO REPLACE EXISTING
NIC	NOT IN CONTRACT
NL	NIGHT LIGHT
NTS	NOT TO SCALE
OC	ON CENTER
P	POLES
PB	PULLBOX
PC	PERSONAL COMPUTER
Ø	PHASE
PNL	PANEL
W	WATT
W	WIRE
WH	WALL HEATER
E	EXISTING
TC	TIME CLOCK
VIF	VERIFY IN FIELD
TS	TIME SWITCH
EA	EACH
EC	EMPTY CONDUIT/ ELECTRICAL CONTRACTOR
EF	EXHAUST FAN
EM	EMERGENCY
EMT	ELECTRICAL METALLIC TUBING
EQUIP	EQUIPMENT
ER	EXISTING TO BE RELOCATED
ETR	EXISTING TO REMAIN
EWF	ELECTRIFIED WORKSTATION FURNITURE
EWH	ELECTRIC WATER HEATER
FA	FIRE ALARM
FBO	FURNISHED BY OTHERS, INSTALLED & WIRED BY EC
FDR	FEEDER
FIBO	FURNISHED & INSTALLED BY OTHERS, WIRED BY EC
FIXT	FIXTURE
FL	FLOOR
FLUOR	FLUORESCENT
G	GROUND
GFI	GROUND FAULT INTERRUPTER
GP	GENERAL PURPOSE
HC	HUNG CEILING
HP	HORSEPOWER
HWH	HOW WATER HEATER
HZ	HERTZ
IC	INTERRUPTING CAPACITY
PP	POWER PANEL
PVC	POLYVINYL CHLORIDE
PWR	POWER
R	REMOVE
RE	RELOCATED EXISTING
REC	RECEPTACLE
RR	REMOVE & RELOCATE
SECT	SECTION
SPDT	SINGLE POLE DOUBLE THROW
SPST	SINGLE POLE SINGLE THROW
SPEC	SPECIFICATION
SW	SWITCH
SWBD	SWITCHBOARD
SYM	SYMMETRICAL
SYS	SYSTEMS
TELE	TELEPHONE
TEMP	TEMPERATURE
TXF	TOILET EXHAUST FAN
TYP	TYPICAL
UON	UNLESS OTHERWISE NOTED
V	VOLT/VOLTAGE
VA	VOLT AMPERE
VFD	VARIABLE FREQUENCY DRIVE
WP	WEATHER PROOF
XFMR	TRANSFORMER
IG	ISOLATED GROUND
TR	TAMPER RESISTANCE

GENERAL NOTES

(APPLY TO ALL "E" DRAWINGS)

1. ALL WORK SHALL BE PERFORMED IN STRICT ACCORDANCE WITH THE CALIFORNIA ELECTRICAL CODE 2022, THE REQUIREMENTS OF THE AUTHORITY HAVING JURISDICTION (AHJ), AND ALL APPLICABLE LOCAL CODES, LAWS, AND REGULATIONS.
2. CONTRACTOR SHALL VISIT THE SITE AND BECOME FAMILIAR WITH ALL EXISTING CONDITIONS THAT MAY AFFECT THE WORK. NO ADDITIONAL COMPENSATION WILL BE CONSIDERED FOR FAILURE TO DO SO.
3. CONTRACTOR SHALL OBTAIN AND PAY FOR ALL PERMITS, TEST REPORTS, AND CERTIFICATIONS FOR TEMPORARY AND FINAL CERTIFICATE OF OCCUPANCY.
4. FIRE STOP ALL PENETRATIONS OF FIRE RATED CONSTRUCTION IN A CODE APPROVED MANNER IN ORDER TO MAINTAIN FIRE RATING. ALL PENETRATIONS SHALL BE SLEEVED AND SEALED WATERTIGHT.
5. SECURE ALL SUPPORTS TO BUILDING STRUCTURE UTILIZING TOGGLE BOLTS (HOLLOW MASONRY), EXPANSION SHIELDS OR INSERTS (CONCRETE AND BRICK), MACHINE SCREWS (METAL), BEAM CLAMPS (FRAMEWORK), WOOD SCREWS (WOOD) OR PAN THRU STRAPS (METAL DECK). NAILS, RAWL PLUGS AND WOOD PLUGS ARE NOT PERMITTED. WHERE REQUIRED BY STRUCTURE, PROVIDE THRU BOLTS AND FISH PLATES. SUPPORT HORIZONTAL RUNS OF METALLIC RACEWAYS NOT MORE THAN 10 FT APART. SUPPORT RACEWAY RISERS AT EACH FLOOR LEVEL. RUN EXPOSED RACEWAYS PARALLEL WITH OR AT RIGHT ANGLES TO WALLS.
6. LEAVE WIRES WITH SUFFICIENT SLACK TO PERMIT MAKING FINAL CONNECTIONS. RACEWAYS OVER 10 FT LONG IN WHICH WIRING IS NOT INSTALLED: FURNISH FISH WIRE.
7. VERIFY LOCATIONS OF OUTLETS AND SWITCHES IN FINISHED ROOMS WITH ARCHITECTURAL DRAWINGS OF INTERIOR DETAILS AND FINISH. IN CENTERING OUTLETS AND LOCATING BOXES AND OUTLETS, ALLOW FOR OVERHEAD PIPES, DUCTS AND MECHANICAL EQUIPMENT, EQUIPMENT, VARIATIONS IN FIREPROOFING AND PLASTERING, WINDOW AND DOOR TRIM, PANELING, HUNG CEILINGS AND THE LIKE. CORRECT ANY INACCURACY RESULTING FROM FAILURE TO DO SO WITHOUT EXPENSE TO OWNER.
8. CONTRACTOR SHALL PROVIDE A WARRANTY ON ALL MATERIALS, EQUIPMENT, AND WORKMANSHIP FOR A PERIOD OF ONE YEAR FROM THE DATE OF FINAL ACCEPTANCE.
9. ALL UNUSED MATERIALS AND DEBRIS SHALL BE LEGALLY REMOVED AND DISPOSED OF AWAY FROM THE PREMISES ON A DAILY BASIS.
10. CONTRACTOR SHALL PATCH, PAINT, AND RESTORE EXISTING SURFACES DAMAGED DURING THE COURSE OF THIS CONSTRUCTION TO PRE-EXISTING CONDITIONS OR BETTER.
11. MINIMUM SIZE OF CONDUIT SHALL BE ¾", AND TYPE SHALL BE ELECTRICAL METALLIC TUBING (EMT), UNLESS OTHERWISE NOTED. PROVIDE NYLON DRAG LINE AND CONDUIT CAP FOR ALL EMPTY CONDUITS.
12. CONNECT CONDUIT TO MOTOR CONDUIT TERMINAL BOXES WITH FLEXIBLE CONDUIT (MINIMUM 18 IN. LENGTH AND 50% SLACK). DO NOT TERMINATE IN OR FASTEN RACEWAYS TO MOTOR FOUNDATION.
13. PULL AND JUNCTION BOXES WHERE INDICATED ON THE DRAWINGS, SHALL BE CONSIDERED SHOWN AT THEIR APPROXIMATE LOCATION. THE CONTRACTOR SHALL LOCATE THEM AS FIELD CONDITIONS DICTATE. ADDITIONAL PULL AND JUNCTION BOXES NOT SHOWN ON DRAWINGS SHALL BE PROVDED WHERE REQUIRED BY APPLICABLE CODE PROVISIONS OR WHERE CALLED FOR BY FIELD CONDITIONS. PULL AND JUNCTION BOXES SHALL BE SURFACE TYPE IN UNFINISHED AREAS AND INSTALLED CANCEALED IN FINISHED AREAS, AND ALL COVERS TO PULL & JUNCTION BOXES SHALL BE READILY ACCESSIBLE.
14. SUPPORT PANEL, JUNCTION AND PULLBOXES INDEPENDENTLY TO BUILDING STRUCTURE WITH NO WEIGHT BEARING ON RACEWAYS.
15. FOR EXACT LOCATION AND MOUNTING HEIGHT OF LIGHTING FIXTURES AND SWITCH/RECEPTACLE OUTLETS, REFER TO ARCHITECTURAL REFLECTED CEILING AND POWER PLANS.
16. ALL ELECTRICAL ACCESSORIES AND EQUIPMENT INSTALLED OUTSIDE OR EXPOSED TO WEATHER SHALL HAVE NEMA 3R ENCLOSURES AND SHALL BE TIGHTLY GASKETED FOR A COMPLETE RAINTIGHT INSTALLATION. ALL BUILDING EXTERIOR MOUNTED RECEPTACLES SHALL BE GFCI RATED AND MOUNTED IN WEATHERPROOF ENCLOSURE.
17. ALL ACCESS PANEL LOCATIONS SHALL BE REVIEWED BY ARCHITECT PRIOR TO INSTALLATION.
18. ELECTRICAL CONTRACTOR SHALL COORDINATE THE LOCATION AND INSTALLATION OF NEW WORK WITH THE GENERAL CONTRACTOR AND OTHER ASSOCIATED TRADES IN A TIMELY MANNER. THE CONTRACTOR IS RESPONSIBLE FOR FIELD VERIFYING ALL DIMENSIONS AND CONDITIONS PRIOR TO CONSTRUCTION. REFER TO ALL GENERAL, MECHANICAL, AND ELECTRICAL, DRAWINGS AND SPECIFICATIONS FOR THIS PROJECT.
19. ALL CONDUITS AND EQUIPMENT TO BE CONCEALED IN FINISHED SPACES UNLESS OTHERWISE NOTED. CONDUITS SHALL BE ENCASED IN THE CONCRETE FLOOR SLAB.
20. ALL EQUIPMENT AND MATERIALS INSTALLED IN PLENUM CEILINGS SHALL BE APPROVED FOR THAT APPLICATION.
21. OUTLET BOXES AND JUNCTION BOXES ON OPPOSITE SIDES OF FIRE-RATED WALLS SHALL BE SEPARATED BY A HORIZONTAL DISTANCE OF NOT LESS THAN 24 INCHES, UNLESS FIRE-RATED BOXES OR PUTTY PADS ARE UTILIZED.
22. COORDINATE ALL FLOOR PENETRATIONS WITH THE STRUCTURAL AND ARCHITECTURAL DRAWINGS. CONFIRM PENETRATION LOCATIONS WITH THE ENGINEER AND OWNER BEFORE INSTALLATION.
23. COORDINATE THE MOUNTING HEIGHT AND LOCATION OF RACEWAYS, COMMUNICATIONS OUTLETS, AND RECEPTACLES WITH THE ARCHITECTURAL CASEWORK DRAWINGS AND DETAILS. COORDINATE LOCATIONS OF LIGHT FIXTURES, SWITCHES, AND RELATED DEVICES WITH THE ARCHITECTURAL DRAWINGS AND DETAILS.
24. REFER TO ARCHITECTURAL PLANS FOR FINAL LOACTIONS OF ALL LUMINARIES AND SWITCHES, AND FOR ALL FINISHED CEILING HEIGHTS.
25. REFER TO ARCHITECTURAL PLANS FOR FINAL LOCATIONS OF ALL ELECTRICAL DEVICES, AND FOR FINAL CEILING AND WALL HEIGHTS AND LAYOUTS.
26. LIGHTING FIXTURES PROVIDED WITH EMERGENCY BATTERY PACKS AND INDICATED WITH SWITCH CONTROL SHALL BE WIRED WITH BATTERY CHARGING/SENSING CIRCUIT WIRED AHEAD OF SWITCH CONTROL.
27. NUMBER(S) SHOWN AT RECEPTACLES, JUNCTION BOXES AND EQUIPMENT INDICATES CIRCUIT NUMBERS IN PANELBOARD. PROVIDE WIRE AND CONDUIT TO INTERCONNECT EQUIPMENT AND DEVICES WITH SAME CIRCUIT NUMBERS AND RUN TO PANELBOARD.

DESIGN PROFESSIONAL

NY ENGINEERS

382 NE 191st Street Suite 49674
MIAMI, FL 33179
(786)-788-0295
ny-engineers.com

DATES

PROJECT

TITLE

ELECTRICAL SYMBOL LIST, ABBREVIATION AND GENERAL NOTES

SHEET NO.

E0.1

Property of NY Engineers

ELECTRICAL SPECIFICATION

1. GENERAL:

A. THE "GENERAL CONDITIONS OF THE CONTRACT FOR CONSTRUCTION," AIA DOCUMENT, LATEST EDITION, AND THESE SPECIFICATIONS AS APPLICABLE ARE PART OF THIS CONTRACT.

B. DRAWING ARE DIAGRAMMATIC AND INDICATE GENERAL ARRANGEMENT OF SYSTEMS AND WORK. CONDUIT ROUTING IS SHOWN DIAGRAMMATICALLY AND DOES NOT SHOW ALL OFFSETS, DROPS AND RISES OF RUNS. THE CONTRACTOR SHALL ALLOW IN HIS PRICE FOR ROUTING OF CONDUIT TO AVOID OBSTRUCTIONS. COORDINATION WITH EXISTING SERVICES, INCLUDING THOSE OF OTHER TRADES, IS REQUIRED, MAINTAIN HEADROOM AND SPACE CONDITIONS.

C. BIDDERS, BEFORE SUBMITTING PROPOSALS, SHALL VISIT AND CAREFULLY EXAMINE THE AREA AFFECTED BY THIS WORK TO FAMILIARIZE THEMSELVES WITH THE EXISTING CONDITIONS AND THE DIFFICULTIES THAT WILL ATTEND THE EXECUTION OF THIS WORK. SUBMISSION OF A PROPOSAL WILL BE CONSTRUED AS EVIDENCE THAT SUCH AN EXAMINATION HAS BEEN MADE, AND LATER CLAIMS WILL NOT BE RECOGNIZED FOR EXTRA LABOR, EQUIPMENT, OR MATERIALS, REQUIRED BECAUSE OF DIFFICULTIES ENCOUNTERED WHICH COULD HAVE BEEN FORESEEN HAD SUCH AN EXAMINATION BEEN MADE.

D. INSTALL WORK SO AS TO BE READILY ACCESSIBLE FOR OPERATION, MAINTANANCE AND REPAIR, MINOR DEVIATIONS FROM DRAWING MAY BE MADE TO ACCOMPLISH THIS, BUT CHANGES WHICH INVOLVE EXTRA COST SHALL NOT BE MADE WITHOUT APPROVAL.

E. REMOVAL AND RELOCATION OF CERTAIN EXISTING WORK MAY BE NECESSARY FOR THE PERFORMANCE OF THE GENERAL WORK. ALL EXISTING CONDITIONS CANNOT BE COMPLETELY DETAILED ON THE DRAWINGS. THE CONTRACTOR SHALL SURVEY THE SITE AND INCLUDE ALL CHANGES AND CHARGES IN MAKING UP THE WORK PROPOSAL.

F. CONNECTIONS TO EXISTING WORK: INSTALL NEW WORK AND CONNECT TO EXISTING WORK WITH MINIMUM INTERFERENCE TO EXISTING FACILITIES. TEMPORARY SHUTDOWNS OF EXISTING SERVICES SHALL BE PERFORMED AT NO ADDITIONAL CHARGES. AT TIMES NOT TO INTERFERE WITH NORMAL OPERATION OF EXISTING FACILITIES AND ONLY WITH WRITTEN CONSENT OF OWNER. ALARM AND EMERGENCY SYSTEMS SHALL NOT BE INTERRUPTED. MAINTAIN CONTINUOUS OPERATION OF EXISTING FACILITIES AS REQUIRED WITH NECESSARY TEMPORARY CONNECTIONS BETWEEN NEW AND EXISTING WORK. CONNECT NEW WORK TO EXISTING WORK IN NEAT AND ACCEPTABLE MANNER. RESTORE EXISTING DISTURBED WORK TO ORIGINAL CONDITION, INCLUDING MAINTENANCE OF WIRING CONTINUITY AS REQUIRED.

G. DISCONNECT, REMOVE AND/OR RELOCATE EXISTING MATERIAL, EQUIPMENT AND OTHER WORK AS NOTED OR REQUIRED FOR PROPER INSTALLATION OF NEW WORK.

H. THE CONTRACTOR SHALL KEEP ALL EQUIPMENT AND MATERIALS, AND ALL PARTS OF THE BUILDING EXTERIOR SPACES AND ADJACENT STREETS, SIDEWALKS AND PAVEMENTS, FREE FROM MATERIAL AND DEBRIS RESULTING FROM THE EXECUTION OF THIS WORK. EXCESS MATERIALS WILL NOT BE PERMITTED TO ACCUMULATE EITHER ON THE INTERIOR OR THE EXTERIOR.

I. SEAL OPENINGS THROUGH PARTITIONS, WALLS AND FLOORS WITH MINERAL WOOL OR OTHER NONCOMBUSTIBLE MATERIAL, UNLESS OTHERWISE NOTED.

J. PROVIDE ALL NECESSARY FLASHING AND COUNTER FLASHING TO MAINTAIN THE WATERPROOFING INTEGRITY OF THE BUILDING AS REQUIRED BY THE INSTALLATION OR REMOVAL OF CONDUIT AND EQUIPMENT, PROVIDE EQUIPMENT CURBS AS REQUIRED.

K. ALL EXISTING MATERIAL, EQUIPMENT AND CONSTRUCTION DEBRIS TO BE REMOVED UNDER THIS CONTRACT SHALL BECOME THE PROPERTY OF THE CONTRACTOR WITH THE EXCEPTION OF SPECIFIC EQUIPMENT ND APPARATUS REQUESTED BY THE BUILDING REPRESENTATIVE, ARCHITECT OR AS NOTED TO BE RELOCATED ON THE DRAWINGS. REMOVED EQUIPMENT SHALL BE PROPERLY DISPOSED OF BY THIS CONTRACTOR.

L. THE CONTRACTOR'S PROPOSAL FOR ALL WORK SHALL BE PREDICATED ON THE PERFORMANCE OF THE WORK DURING REGULAR WORKING HOURS. WHEN SO DIRECTED, HOWEVER, THE CONTRACTOR SHALL INSTALL WORK DURING OVERTIME HOURS AND THE ADDITIONAL COST TO BE CHARGED THEREFORE SHALL BE ONLY THE "PREMIUM" PORTION OF THE WAGES PAID.

M. UNLESS OTHERWISE SPECIFICALLY NOTED OR SPECIFIED, INCLUDE ALL CUTTING AND PATCHING OF EXISTING FLOORS, WALLS, PARTITIONS AND OTHER MATERIALS IN THE EXISTING BUILDING. THE CONTRACTOR SHALL RESTORE THESE AREAS TO ORIGINAL CONDITION.

N. ALL MATERIAL AND EQUIPMENT SHALL BE NEW UNLESS OTHERWISE NOTED AND SHALL BE IN ACCORDANCE WITH BUILDING STANDARDS.

O. INSURANCE: PROVIDE IN ACCORDANCE WITH OWNER/BUILDING REQUIREMENTS AND SHALL INCLUDE A HOLD HARMLESS CLAUSE FOR OWNER AND ENGINEER.

P. THE FINAL ACCEPTANCE SHALL BE MADE AFTER THE CONTRACTOR HAS ADJUSTED HIS EQUIPMENT, TESTED THE VARIOUS SYSTEMS, DEMONSTRATED THAT IT FULFILLS THE REQUIREMENTS OF THE DRAWINGS AND SPECIFICATIONS AND HAS FURNISHED ALL THE REQUIRED CERTIFICATED OF INSPECTION AND APPROVAL.

2. 2. GENERAL PROVISIONS FOR ELECTRICAL WORK:

A. DEFINITIONS:

1) "PROVIDE": TO FURNISH, INSTALL AND CONNECT UP COMPLETE AND READY FOR SAFE AND REGULAR OPERATION THE PARTICULAR WORK REFERRED TO UNLESS SPECIFICALLY OTHERWISE NOTED.

2) "INSTALL": TO ERECT, MOUNT AND CONNECT COMPLETE WITH RELATED ACCESSORIES.

3) "FURNISH" OR "SUPPLY": TO PURCHASE, PROCURE, ACQUIRE. AND DELIVER COMPLETE WITH RELATED ACCESSORIES.

4) "WORK": LABOR, MATERIALS, EQUIPMENT, APPARATUS, CONTROLS, ACCESSORIES AND OTHER ITEMS REQUIRED FOR PROPER AND COMPLETE INSTALLATION.

5) "WIRING": RACEWAY. FITTINGS, WIRE, BOXES, AND RELATED ITEMS.

6) "CONCEALED": EMBEDDED IN MASONRY OR OTHER CONSTRUCTION, INSTALLED IN FURRED SPACES, WITHIN DOUBLE PARTITIONS OR HUNG CEILINGS, IN TRENCHES, IN CRAWL SPACES, OR IN ENCLOSURES.

7) "EXPOSED": NOT INSTALLED UNDERGROUND OR "CONCEALED" AS DEFINED ABOVE.

8) "SIMILAR" OR "EQUAL": EQUAL IN MATERIALS, WEIGHT, SIZE, DESIGN AND EFFICIENCY OF SPECIFIED PRODUCT.

B. TEMPORARY LIGHT AND POWER: PROVIDE TEMPORARY LIGHT AND POWER SYSTEMS AT EARLIEST POSSIBLE DATE WITHIN THE CONSTRUCTION AREAS FOR THE REQUIREMENTS OF ALL TRADES AS HEREIN DESCRIBED. EXTEND SYSTEMS TO NEW CONSTRUCTION AS SOON AS PHYSICALLY POSSIBLE. MAINTAIN SYSTEM DURING WORKING OWNER. PROVIDE ALL REQUIRED MAINTENANCE, INCLUDING LAMPS AND SOCKETS.

C. QUALITY ASSURANCE

1) QUALITY OF MATERIALS: ALL EQUIPMENT SHALL BE NEW SPECIFICATION GRADE, FREE FROM DEFECTS AND LISTED BY APPROVED TESTING AGENCY AND BEARING THEIR LABEL MATERIALS AND EQUIPMENT OF SIMILAR APPLICATION SHALL BE OF SAME MANUFACTURER, EXCEPT AS NOTED.

2) GUARANTEE: ALL MATERIALS AND WORKMANSHIP SHALL BE GUARANTEED AS DEFINED IN PARAGRAPH 2.C.

3) CURRENT CHARACTERISTICS:

a. DISTRIBUTION: 120/208 OR 277/480 VOLT, 3 PHASE, 4 WIRE, 60 HERTZ WITH GROUNDED NEUTRAL.

4) HEIGHTS OF OUTLETS:

a. FROM FINISHED FLOOR TO CENTERLINE OF OUTLETS FOR:

- RECEPTACLES AND TELEPHONES: 1 FT-6 IN.
- WALL SWITCHES: 4 FT-0 IN.
- WALL FIXTURES: 7 FT-0 IN.
- MOTOR CONTROLLERS: 5 FT-0 IN.
- CLOCKS: 7 FT 6 IN

b. EXCEPTIONS: AT JUNCTION OF DIFFERENT WALL FINISH MATERIALS, ON MOLDING OR BREAK IN WALL SURFACE, IN VIOLATION OF CODE, OR AS NOTED OR DIRECTED.

D. PRODUCT DELIVERY, STORAGE AND HANDLING

1) MOVING OF EQUIPMENT: WHERE NECESSARY, SHIP IN CARTED SECTIONS OF SIZE TO PERMIT PASSING THROUGH AVAILABLE SPACES.

2) ACCESSIBILITY: FOR OPERATION, MAINTENANCE AND REPAIR, MINOR DEVIATIONS SHALL BE PERMITTED, CHANGES OF MAGNITUDE OR INVOLVING EXTRA COST ARE NOT PERMISSIBLE WITHOUT REVIEW. GROUP CONCEALED ELECTRICAL EQUIPMENT REQUIRING ACCESS WITH EQUIPMENT FREELY ACCESSIBLE THROUGH ACCESS DOORS.

E. MATERIALS

1) NAMEPLATES: PROVIDE BLACK LAMICOID SHEET WITH 3/4 IN. WHITE LETTERING, FASTENED WITH EPOXY CEMENT FOR EACH DISCONNECT SWITCH, CIRCUIT BREAKER, PANEL, CABINET, TRANSFORMER, ENCLOSURE, MOTOR CONTROLLER AND THE LIKE. NAMEPLATES SHALL DESCRIBE THE NAME AND NUMBER OF EACH COMPONENT.

2) CABLE TAGS: TAG EACH CONDUCTOR PASSING THROUGH SPLICE OR PULLBOX WITH A WHITE LINEN TAG, INDICATING POINT OF ORIGIN AND TERMINATION OF THE CIRCUIT.

3) INSERTS AND SUPPORTS:

a. INSERTS: STEEL, SLOTTED TYPE, FACTORY PAINTED.

- SINGLE ROD: SIMILAR TO GRINNELL FIG. 281.
- MULTI-ROD: SIMILAR TO FEE AND MASON SERIES 9000 WITH END CAPS AND CLOSURE STRIPS.
- CLIP FORM NAILS FLUSH WITH INSERTS.
- MAXIMUM LOADING 75 PERCENT OF RATING.

b. SUPPORTS FROM BUILDING CONSTRUCTION: INSERTS, BEAM CLAMPS, STEEL FISHPLATES (IN CONCRETE FILL ONLY), CANTILEVER BRACKETS OR OTHER MEANS. SUBMIT FOR REVIEW.

c. GROUPED LINES AND SERVICES: TRAPEZE HANGERS OF BOLTED ANGLES OR CHANNELS.

d. WHERE BUILDING CONSTRUCTION IS INADEQUATE: PROVIDE ADDITIONAL FRAMING. SUBMIT FOR REVIEW.

F. PAINT SHALL BE THE BEST GRADE FOR ITS PURPOSE. DELIVER INORIGINAL SEALED CONTAINERS AND APPLY IN ACCORDANCE WITH MANUFACTURER'S INSTRUCTIONS. COLORS SHALL BE AS SELECTED BY ARCHITECT OR ENGINEER. UTILIZE GALVANIZED IRON PRIMER ON PANEL AND PULL BOXES, AFTER FABRICATION. UTILIZE HOT DIPPED GALVANIZED OR DIPPED IN ZINC BASED PRIMER FOR: OUTLET BOXES, JUNCTION BOXES, CONDUIT HANGERS, RODS, INSERTS AND SUPPORTS. ZINC BASED PRIMER WITH FINISH TO MATCH BRUSH AND CLEAN WORK PRIOR TO CONCEALING, PAINTING AND ACCEPTANCE. PAINTED EXPOSED WORK SOILED OR DAMAGED; CLEAN AND REPAIR TO MATCH ADJOINING WORK BEFORE FINAL ACCEPTANCE. REMOVE DEBRIS FROM INSIDE AND OUTSIDE OF MATERIAL AND EQUIPMENT.

G. FINAL LOCATIONS AND MOUNTING ORIENTATIONS OF ALL SWITCHES, RECEPTACLES AND LIGHT FIXTURES SHALL BE VERIFIED WITH ARCHITECT.

H. ALL ACCESS DOOR LOCATIONS SHALL BE REVIEWED BY ARCHITECT PRIOR TO INSTALLATION.

3. SCOPE OF WORK:

A. SCOPE OF WORK SHALL CONSIST OF PROVIDING ALL LABOR, MATERIALS, EQUIPMENT, SERVICES, AND FEES NECESSARY FOR A COMPLETE AND SAFE INSTALLATION, IN ACCORDANCE WITH THE CALIFORNIA ELECTRICAL CODE 2022 (WITH LOCAL ADOPTIONS), ALL APPLICABLE INDUSTRY STANDARDS, NATIONAL AND LOCAL CODES, AND THE REQUIREMENTS OF THE AUTHORITIES HAVING JURISDICTION, AS INDICATED ON THE DRAWINGS AND HEREIN SPECIFIED.

B. ALL DRAWINGS, PLANS, DETAILS, SPECIFICATIONS AND SPECIFICATION ADDENDA ARE MADE PART OF THIS CONTRACT AND SHALL APPLY TO ALL WORK UNDER THE CONTRACT UNLESS OTHERWISE AMENDED, MODIFIED, SUPPLIED OR SPECIFIED HEREIN.

C. THE CONTRACTOR SHALL FURNISH A WRITTEN GUARANTEE TO REPLACE OR REPAIR PROMPTLY AND ASSUME RESPONSIBILITY FOR ALL EXPENSES INCURRED FOR ANY WORKMANSHIP AND EQUIPMENT IN WHICH DEFECTS DEVELOP WITHIN ONE YEAR FROM THE DATE OF FINAL CERTIFICATE FOR PAYMENT AND/OR FROM DATE OR ACTUAL USE OF EQUIPMENT OR OCCUPANCY OF SPACES BY OWNER INCLUDED UNDER THE VARIOUS PARTS OF THE WORK, WHICHEVER, DATE IS EARLIER, THIS WORK SHALL BE DONE AS DIRECTED BY THE OWNER. THIS GUARANTEE SHALL ALSO PROVIDED THAT WHERE DEFECTS OCCUR, THE CONTRACTOR WILL ASSUME RESPONSIBILITY OF OTHER TRADES AFFECTED BY DEFECTS, REPAIRS OR REPLACEMENTS IN EQUIPMENT SUPPLIED BY THE CONTRACTOR.

D. THE CONTRACTOR SHALL GIVE NECESSARY NOTICE, FILE DRAWINGS AND SPECIFICATIONS WITH ALL DEPARTMENTS HAVING JURISDICTION, WORK AND PAY ALL FEES THEREFORE. THE CONTRACTOR SHALL ARRANGE FOR INSPECTION AND TESTS OF ANY OR ALL PARTS OF THE WORK IF SO REQUIRED BY AUTHORITIES AND PAY ALL CHARGES FOR SAME. THE CONTRACTOR SHALL PAY ALL COSTS FOR, AND FURNISH TO THE OWNER BEFORE FINAL BILLING, ALL CERTIFICATES NECESSARY AS EVIDENCE THAT THE WORK INSTALLED CONFORMS WITH ALL REGULATIONS WHERE THEY APPLY TO THIS WORK.

E. CONTRACTOR SHALL PERFORM ALL CONTROLLED INSPECTIONS IN ACCORDANCE WITH THE BUILDING CODE. SECURE ALL REQUIRED PERMITS AND APPROVALS AND TRANSMIT SAME TO OWNER. CONTRACTOR SHALL BE RESPONSIBLE FOR ALL FEES.

F. AREAS WITH NO ELECTRICAL WORK SHALL REMAIN AS IS. CONTRACTOR SHALL MAINTAIN CONTINUITY OF ALL ELECTRICAL SYSTEMS TO ALL AREAS NOT COVERED BY THIS RENOVATION AND SHALL PROVIDE 48 HOUR NOTICE TO LANDLORD OF ANY PLANNED POWER INTERRUPTIONS OR SIGNAL SYSTEM OUTAGES.

4. SHOP DRAWINGS

A. PRIOR TO THE INSTALLATION OF ANY WORK AND PROCUREMENT OF EQUIPMENT, CONTRACTOR SHALL PROVIDE COMPLETE SETS OF COORDINATED SHOP DRAWINGS OF ALL NEW AND EXISTING EQUIPMENT,INDICATING CAPACITY, DIMENSIONS AND SEQUENCE OF OPERATION FOR WRITTEN APPROVAL BY THE ARCHITECT AND ENGINEER.

B. INDICATE ON EACH SHOP DRAWINGS SUBMITTED:

1) PROJECT NAME AND LOCATION

2) NAME OF ARCHITECT AND ENGINEER

3) ITEM IDENTIFICATION

4) APPROVAL STAMP OF PRIME CONTRACTOR

C. SUBMISSIONS:

1) SUBMISSIONS 11 IN. X 17 IN. OR SMALLER: IF THE SUBMISSION IS A CATALOG CUT, THEN THE CONTRACTOR SHALL SUBMIT ONE ORIGINAL AND TWO COPIES. OTHERWISE, HE SHALL SUBMIT THREE COPIES. THE ARCHITECT WILL FORWARD THE ORIGINAL AND ONE COPY (TWO COPIES WHEN NO ORIGINAL IS RECEIVED) TO THE ENGINEER. ALL CATALOG CUTS SHALL BE COMPLETE.

2) SUBMISSIONS LARGER THAN 11 IN. X 17 IN.: SUBMIT TWO PRINTS AND ONE PAPER SEPIA TO THE ARCHITECT. THE ARCHITECT WILL FORWARD ONE PRINT AND THE PAPER SEPIA TO THE ENGINEER.

D. SUBMIT SHOP DRAWINGS FOR THE FOLLOWING:

1) SAFETY/DISCONNECT SWITCHES

2) FUSES

3) CIRCUIT BREAKERS

4) PANELBOARDS/LOADCENTER (INCLUDING DIMENSIONS, SCHEDULES, AND CATALOG CUTS).

5) RACEWAYS

6) WIRE AND CABLE

7) WALL SWITCHES

8) INSERTION RECEPTACLES

9) MOMENTARY CONTACT SWITCHES

10) TIME SWITCHES

11) LIGHTING FIXTURES.

12) TRANSFORMER.

E. ASSIST AND PROVIDE ALL NECESSARY INFORMATION, DIAGRAMS, SKETCHES, ETC. TO THE HVAC CONTRACTOR, FOR THE PREPARATION OF COORDINATED SHOP DRAWINGS INDICATING ROUTING OF FEEDERS, CONTROL CONDUITS, RECESSED FIXTURES AND ADJACENT NEARBY PIPING AND DUCTWORK WHERE APPLICABLE, CERTIFIED BY ALL TRADES THAT COORDINATION HAS BEEN ESTABLISHED. SUBMIT FOUR(4) BOOKBOUND OPERATING AND SERVICE MANUALS WHICH SHALL INCLUDE COPIES OF ALL SHOP DRAWING. PROVIDE SHOP DRAWINGS FOR PANELS, FIXTURES. WIRING DEVICES, CONDUIT, CABLE, DISCONNECT SWITCH, RELAYS, CONTRACTORS, AND OTHER SYSTEMS AS DIRECTED BY THE ENGINEER.

5. AS-BUILT DRAWINGS AND EQUIPMENT OPERATIONAL INSTRUCTIONS

A. UPON COMPLETION AND ACCEPTANCE OF WORK, CONTRACTOR SHALL FURNISH WRITTEN INSTRUCTIONS AND EQUIPMENT MANUALS AND DEMONSTRATE TO THE OWNER THE PROPER OPERATION AND MAINTENANCE OF ALL EQUIPMENT AND APPARATUS FURNISHED UNDER THIS CONTRACT.

B. THESE INSTRUCTIONS SHALL BE TYPED ON 8-1/2 IN. X 11 IN. PAPER A BOUND IN THREE RING BINDERS WITH CLEAR ACETATE COVERS. CONTRACTOR SHALL GIVE THREE COPIES OF THE INSTRUCTIONS TO THE OWNER AND ONE COPY TO THE ENGINEER.

C. THE INSTRUCTION BOOKLET SHALL BEAR THE NAME, ADDRESS AND TELEPHONE NUMBER OF THE PROJECT, ARCHITECT AND ENGINEER.

D. REPRODUCIBLE "AS-BUILT" DRAWINGS SHALL BE PROVIDED INDICATING THE AS INSTALLED CONDITIONS OF THE WORK. "AS-BUILT" DRAWINGS SHALL BE PROVIDED TO THE ARCHITECT AFTER COMPLETION OF THE INSTALLATION.

6. LOW-VOLTAGE DISTRIBUTION EQUIPMENT:

A. PROVIDE COMPLETE EQUIPMENT INCLUDING: SWITCHES, FUSES, CIRCUIT BREAKERS, PANELS AND TRANSFORMERS.

B. ALL EQUIPMENT SHALL CONFORM TO NEMA, ANSI AND IEEE STANDARDS.

C. DISCONNECT SWITCHES SHALL BE FUSED OR NONFUSED AS NOTED. VOLTAGE SHALL BE AS REQUIRED. SWITCHES SHALL BE HEAVY DUTY, EXCEPT AS NOTED, AND HORSEPOWER RATED FOR MOTOR LOADS. TOGGLE TYPE SWITCHES SHALL BE NONFUSED, LOAD BREAK, HAVING MAXIMUM RATINGS OF 20 AMP AT 600 VOLTS AND 30 AMP AT 240 VOLTS. TWO-POLE SWITCHES SHALL BE SIMILAR TO HART AND HEGEMAN NO. 6808F. THREE-POLE SWITCHES SHALL BE SIMILAR TO HART AND HEGEMAN NO. 7810F. KNIFE-BLADE TYPE SWITCHES SHALL BE LOAD BREAK, QUICK-MAKE- QUICK-BREAK, UL CLASS R UP TO 600 AMP. MAXIMUM RATING EXCEPT AS NOTED SHALL BE 800 AMP. ARC QUENCHERS SHALL BE PROVIDED. SWITCHES SHALL BE SIMILAR TO GENERAL ELECTRIC QMR. ALL SWITCH ENCLOSURES SHALL BE DEAD FRONT, NEMA TYPE 1, EXCEPT AS NOTED.

7. FUSES:

A. CIRCUITS 0 TO 600 AMPERES SHALL BE PROTECTED BY FUSES SIMILAR TO CURRENT LIMITING BUSSMAN LOW-PEAK DUAL-ELEMENT TIME-DELAY LPN-RK (AMP)SP (250V) /LPS-RK (AMP)SP (600V) OR LPJ (AMP)SP (600V) (UL CLASS RK1 OR CLASS J), AND BE LISTED BY UL WITH AN INTERRUPTING RATING OF 300,000 AMPERES RMS SYMMETRICAL.

B. MOTOR CIRCUITS - ALL INDIVIDUAL MOTOR CIRCUITS WITH FULLLOAD AMPERE RATINGS (FLA) OF 480 AMPERES OR LESS SHALL BE PROTECTED BY FUSES SIMILAR TO CURRENT LIMITING BUSSMANN LOW-PEAK DUAL-ELEMENT TIME-DELAY LPN-RK (AMP)SP (250V) /LPS-RK (AMP)SP (600V) OR LPJ (AMP) SP (600V) (UL CLASS RK1 OR CLASS J), AND BE LISTED BY UL WITH AN INTERRUPTING RATING OF 300,000 AMPERES RMS SYMMETRICAL.

C. ALL FUSES SHALL BE PROVIDED BY SAME MANUFACTURER.

D. PROVIDE 1 SPACE MATCHING FUSE FOR EACH SET OF 3.

E. CIRCUIT BREAKERS: MOLDED CASE BREAKERS SHALL BE THERMAL- MAGNETIC, QUICK-MAKE-QUICK-BREAK, BOLT-ON TYPE, MANUALLY OPERATED WITH INSULATED TRIP-FREE HANDLE. MULTI-POLE TYPE BREAKERS SHALL CONTAIN INTERNAL TRIP BAR. TERMINALS SHALL BE SUITABLE FOR COPPER OR ALUMINUM CABLE. FURNISH AUXILIARY DEVICES WHERE REQUIRED FOR SHUNT-TRIPPING, OPEN AND CLOSE MOTOR OPERATOR AND ALARM INDICATION. ENCLOSURES SHALL BE DEAD FRONT, NEMA TYPE 1, EXCEPT AS NOTED. FRAMES, IC AND INTERCHANGEABLE TRIPS SHALL BE AS FOLLOWS, UNLESS OTHERWISE NOTED:

1) 120 VOLTS, 100-AMP FRAME: 10,000 AMPS, 1 POLE.

2) 120/240 VOLTS, 225-AMP FRAME, 22,000 AMPS MINIMUM.

8. DISTRIBUTION PANELBOARDS, CIRCUIT BREAKER TYPE:

A. THREE PHASE, 4 OR 5 WIRE, COPPER BUS BARS, WITH 2, 3, OR 4 WIRE BRANCHES, AS NOTED. CAPACITY OF PANEL AND CIRCUITS, AS NOTED BELOW. PANELBOARD TO HAVE GROUND BUS SAME SIZE AS PHASE BUSES.

B. CABINETS: CODE GAUGE GALVANIZED SHEET STEEL PRIMED AND PAINTED WITH TRIM AND DOOR, TYPE AS NOTED, LAP AND RIVET CORNERS OR FORM AS APPROVED.

C. TRIM: ONE PIECE FULL FINISH PRIMED AND PAINTED SHEET STEEL. TRIM SHALL BE MOUNTED WITH A CONTINUOUS PIANO HINGE CONFIGURED IN SUCH A MANNER THAT IT SHALL BE POSSIBLE TO GAIN FULL ACCESS TO CIRCUIT BREAKERS AND WIRING GUTTERS WITHOUT REMOVING THE TRIM. PROVIDE A MULTI-PIN CYLINDER LOCK (YALE, CORBIN OR EQUAL) TO LATCH THE TRIM. KEYS SHALL BE MILLED.

D. HARDWARE: MULTI-PIN, CYLINDER LOCKS WITH MILLED KEYS. ALL PANELS SHALL BE KEYED ALIKE. DOOR OVER 48″ HIGH SHALL BE EQUIPPED WITH A CHROME PLATED VAULT HANDLE, BUILT-IN LOCK AND 3-POINT CATCH FASTENING DOOR AT TOP, BOTTOM AND CENTER.

E. HINGES: CONCEALED, CONTINUOUS PIANO HINGE AS DESCRIBED ABOVE.

F. DIRECTORY HOLDER: MEAL FRAME WITH NONBREAKABLE TRANSPARENT COVER AND DIRECTORY CARD. ENTRIES TO BE TYPEWRITTEN BY ELECTRICAL CONTRACTOR. PROVIDE AN ENGRAVED LAMINATED NAMEPLATE ADJACENT TO EACH BRANCH BREAKER. MOUNT WITH SELF TAPPING MACHINE SCREWS.

G. FURNISH MULTI-CABLE LUGS WHERE REQUIRED. DOUBLE LUGGING NOT PERMITTED. SECURE LUGS TO BUS BY STUD BOLTS.

H. PANELBOARD CONSTRUCTION FOR BOLTED TYPE BREAKERS. MINIMUM SHORT CIRCUIT RATING 25,000 AMPERES, RMS SYMMETRICAL FOR ALL 120/208V APPLICATIONS. INDIVIDUAL CIRCUIT BREAKERS SHALL HAVE MINIMUM 100A FRAME, TRIPS SIZED AS SHOW ON THE PLANS.

I. MINIMUM GUTTER SPACES: PANELS WITH 225 AMPERE MAINS, 5-¾″ MINIMUM, 400 AMPERES AND OVER, MINIMUM GUTTERS 8″. FOR PANELS WITH THROUGH FEEDERS, INCREASE GUTTER WIDTH BY 2″ MINIMUM AND PROVIDE A SHEET STEEL BARRIER BETWEEN THE PANEL GUTTER AND THE THROUGH FEEDER PORTION OF THE BACK BOX. BRANCH CIRCUIT BREAKERS SHALL BE MECHANICALLY INTERLOCKED WHEN SHOWN ON DRAWINGS.

J. DISTRIBUTION AND SUB-DISTRIBUTION PANELBOARDS SHALL BE A MINIMUM OF 30" WIDE AND 10" DEEP.

K. PANELBOARD SHALL HAVE MAIN CIRCUIT BREAKER OR MAIN LUGS AS INDICATED ON THE DRAWINGS. QUANTITY, POLES AND TRIP RATINGS OF BRANCH CIRCUIT BREAKERS TO BE AS INDICATED ON DRAWINGS.

L. PANELBOARD SHALL HAVE ENGRAVED WHITE CORE, BLACK LAMACOID NAMEPLATE SCREWED ONTO PANE TRIM WITH DESIGNATION LISTED (PANELBOARD NAME, VOLTAGE, RATING OR MAINS IN AMPS).

9. DISTRIBUTION PANELBOARDS, SWITCH AND FUSE:

A. THREE PHASE, 3 OR 4 WIRE WITH COPPER BUS BARS. ALL THROUGH BUS SHALL BE INSULATED.

B. NEMA CLASS 1 CONSTRUCTION TO ACCOMMODATE FUSIBLE, INDIVIDUALLY ENCLOSED SWITCHES, FRONT REMOVABLE, SWITCH AND DOOR INTERLOCKS. COVERS TO BE PAD-LOCKABLE.

C. PANELBOARD SHALL BE CONSTRUCTED OF CODE-GAUGE STEEL, GRAY FINISH OVER RUST INHIBITOR, FOR SURFACE MOUNTING. BOX AND PANEL FRAME SHALL BE FLANGED AND REINFORCED FOR RIGID SUPPORT OF INTERIOR AND ACCURATE ALIGNMENT OF INTERIOR WITH FRONT. TRIMS TO BE FASTENED TO BACK BOX WITH SCREWS.

D. ALL BRANCH SWITCHES SHALL HAVE INDIVIDUAL ENGRAVED LAMICOID NAMEPLATES (BLACK WITH WHITE CORE).

E. DISTRIBUTION PANELBOARD CONSTRUCTION MINIMUM SHORT CIRCUIT RATING 25,000 AMPERES, REMS SYMMETRICAL FOR ALL 120/208V APPLICATIONS. APPLICATIONS.

F. DISCONNECTS

1) DISCONNECT SWITCHES SHALL CONFORM TO NEMA AND UL STANDARDS, AND SHALL BE HORSEPOWER RATED.

2) SWITCHING MECHANISM SHALL BE QUICK-MAKE, QUICK-BREAK, SINGLE THROW WITH EXTERNAL OPERATING HANDLE MECHANCIALLY INTERLOCKED WITH ENCLOSURE COVER TO PROVIDE ACCESS TO INTERIOR WHEN DISCONNECT IS IN OFF POSITION ONLY. PROVIDE MEANS TO LOCK OPERATING HANDLE IN THE OPEN AND CLOSED POSITION. DESIGNATE ON THE ENCLOSURE THE OPEN AND CLOSED POSITION OF THE OPERATING HANDLE.

3) SWITCHES SHALL BE OF THE DOUBLE STATIONARY CONTACT TYPE.

4) SWITCHES SHALL BE EQUIPPED WITH REJECTION TYPE FUSE HOLDERS, FUSIBLE AS SHOWN ON THE DRAWINGS; PROVIDE COMPLETE WITH FUSES AS SCHEDULED.

Property of NY Engineers

DESIGN PROFESSIONAL
NY ENGINEERS
382 NE 191st Street Suite 49674
MIAMI, FL 33179
(786)-788-0295
ny-engineers.com

DATES

PROJECT

TITLE

ELECTRICAL SPECIFICATIONS (1 OF 2)

SHEET NO.

E0.2

ELECTRICAL SPECIFICATION (CONT.)

D. INSTALLATION

1) DISTRIBUTION PANELBOARD SHALL BE MOUNTED TO STRUCTURAL STEEL CHANNEL (KINDORF) WHICH SHALL BE BOLTED TO THE WALL USING EXPANSION ANCHORS FOR LARGE PANELS.

H. IDENTIFICATION

1) PROVIDE NAMEPLATE AT EACH SWITCH IDENTIFYING THE LOAD SERVED.

2) NAMEPLATES SHALL BE MOUNTED ON THE FRONT COVER SECURED WITH SELF-TAPPING SCREWS OR NUTS AND BOLTS. NAMEPLATES SHALL BE LAMINATED PHENOLIC, BLACK WITH A MINIMUM OF ¼" HIGH WHITE LETTERING.

I. DISTRIBUTION AND SUB-DISTRIBUTION PANELBOARDS SHALL BE A MINIMUM OF 30" WIDE AND 10" DEEP.

J. POWER PANELBOARDS SHALL BE SIMILAR TO GENERAL ELECTRIC TYPE "OMR", AS MANUFACTURED BY ATLAS SWITCH COMPANY, ELECTRIC SWITCHBOARD COMPANY OR APPROVED EQUAL.

K. PANELBOARD SHALL HAVE MAIN CIRCUIT BREAKER OR MAIN LUGS AS INDICATED ON THE DRAWINGS. QUANTITY, POLES AND TRIP RATINGS OF BRANCH CIRCUIT BREAKERS TO BE AS INDICATED ON DRAWINGS.

L. PANELBOARD SHALL HAVE ENGRAVED WHITE CORE, BLACK LAMACOID NAMEPLATE SCREWED ONTO PANE TRIM WITH DESIGNATION LISTED (PANELBOARD NAME, VOLTAGE, RATING OR MAINS IN AMPS).

M. MATERIALS

1) RACEWAYS:

a. RIGID STEEL CONDUIT: FULL-WEIGHT PIPE, GALVANIZED, THREADED.

b. ELECTROMETALLIC TUBING (EMT): THIN WALL PIPE, GALVANIZED, THREADLESS.

c. FLEXIBLE STEEL CONDUIT: CONTINUOUS SINGLE STRIP, GALVANIZED.

d. WIREWAYS: WIRE SHALL BE AS NOTED, MINIMUM NO. 16 GAUGE STEEL WITH GROUND CONTINUITY. FINISH SHALL BE BAKED ENAMEL. COVERS SHALL BE SCREW-ON.

e. SURFACE METAL RACEWAY: SIZE AS NOTED. BASE 0.04 IN., COVER 0.25 IN. MATERIAL SHALL BE STEEL. FINISH SHALL BE BAKED ENAMEL. COVERS SHALL BE SCREW-ON.

2) FITTINGS AND ACCESSORIES:

a. RIGID STEEL: NONSPLIT, THREADED, STEEL OR MALLEABLE IRON. ZINC DIE CAST NOT PERMITTED.

b. ELECTROMETALLIC TUBING: COMPRESSION TYPE. GALVANIZED RIGID STEEL ELBOWS, 2 IN. OR LARGER.

c. FLEXIBLE METALLIC CONDUIT: ANGLE WEDGE TYPE WITH INSULATED THROAT.

d. BUSHINGS: METALLIC INSULATED TYPE.

3) BOXES:

a. OUTLET BOXES: EXCEPT AS OTHERWISE REQUIRED BY CONSTRUCTION, DEVICES OR WIRING, BOXES SHALL BE STAMPED STEEL, 4 IN. SQUARE OR OCTAGON FOR FIXTURES. BOXES ABOVE CEILING SHALL BE 1-1/2 IN. DEEP. BOXES IN CEILING OR SLAB SHALL BE 3 IN. DEEP. BOXES IN WALL FOR FIXTURES SHALL BE 2-3/4 IN. DEEP. BOXES IN WALL FOR RECEPTACLES AND SWITCHES SHALL BE 1-1/2 IN. DEEP. FURNISH WITH RAISED COVERS AND FIXTURE STUDS WHERE REQUIRED. WITHOUT FIXTURE OR DEVICE: FURNISH BLANK COVER. OFFSET BACK-TO-BACK OUTLETS WITH MINIMUM 6 IN. SEPARATION.

b. JUNCTION AND PULL BOXES: GALVANIZED SHEET STEEL WITH SCREW-ON COVERS, EXCEPT AS NOTED. FURNISH WITH INSULATED SUPPORTS FOR CABLES. LOCATIONS SHALL BE AS NOTED OR REQUIRED AND ACCESSIBLE. PROVIDE BARRIERS IN NEW AND RENOVATED BOXES BETWEEN 120/208 VOLT AND 265/460 VOLT WIRING AND BETWEEN EMERGENCY AND NORMAL WIRING. FLOOR BOXES SHALL BE SUITABLE FOR CONDUIT AND DEVICES NOTED. RAISED OUTLETS SHALL BE HUBBELL #B2414 SERIES WITH ABOVE FLOOR FITTING. TELEPHONE: BUSHED HOLE. POWER: DUPLEX RECEPTACLE OR OTHER AS NOTED. INCREASE SIZE TO SUIT AS NECESSARY. FLUSH OUTLETS SHALL BE HUBBELL #B2414 SERIES WITH FLUSH FLOOR FITTING FOR TELEPHONE AND FLUSH DUAL FLAP COVER WITH DUPLEX RECEPTACLE FOR POWER AS NOTED. INCREASE SIZE TO SUIT AS NECESSARY.

N. PROVIDE RACEWAYS ONLY AS HEREIN SPECIFIED, EXCEPT AS NOTED. RACEWAYS SHALL BE RUN CONCEALED, EXCEPT AS NOTED.

PROVIDE RACEWAY SUPPORT UTILIZING CEILING TRAPEZE, STRAP HANGERS, OR WALL BRACKETS. PROVIDE U-BOLTS AT EACH FLOOR LEVEL OF RISER RACEWAYS AND CONNECTED TO ACCEPTABLE SUPPORTS. PROVIDE RISER CLAMPS AT EACH FLOOR LEVEL OF RISER RACEWAYS AND RESTING ON SLAB. FOR THROUGH-THE-FLOOR SYSTEMS, UTILIZE AN ASSEMBLY SIMILAR TO HUBBELL FIRE RATED POKE-THROUGH-FLOOR BOX SYSTEM. FOR ABOVE FLOOR FITTINGS TELEPHONE SHALL BE BUSHED HOLE AND POWER SHALL BE DUPLEX RECEPTACLE OR OTHER AS NOTED. PROVIDE SEPARATION BARRIER BETWEEN POWER AND TELEPHONE COMPARTMENTS. PROVIDE JUNCTION BOX ON UNDERSIDE OF FLOOR. PACK FITTING TO RESTORE FIRE RATING OF FLOOR.

SECURE ALL RACEWAYS TO SUPPORTS WITH PIPE STRAPS OR U-BOLTS. SPACING OF SUPPORTS SHALL BE A MINIMUM OF 10 FT ON CENTER FOR METALLIC RACEWAY AND AS REQUIRED FOR NONMETALLIC RACEWAY. SPACING SHALL BE 5 FT ON CENTER FOR WIREWAYS AND PER CODE AND AS NOTED FOR OTHERS. MOUNT SUPPORTS TO STRUCTURE MASONRY WITH TOGGLE BOLTS ON HOLLOW MASONRY, EXPANSION SHIELDS OR INSERTS IN CONCRETE AND BRICK, MACHINE SCREWS ON METAL, BEAM CLAMPS ON FRAMEWORK, WOOD SCREWS ON WOOD, AND PAN THROUGH STRAPS IN METAL DECK. NAILS, RAWL PLUGS OR WOOD PLUGS SHALL NOT BE PERMITTED. WHERE REQUIRED BY STRUCTURE, FURNISH THROUGH BOLTS AND FISHPLATES.

EXPOSED RACEWAYS SHALL BE RUN PARALLEL WITH OR AT RIGHT ANGLES TO WALLS. PROVIDE CLEARANCE WITH WATER, STEAM OR OTHER PIPING (MINIMUM 3 IN. SEPARATION FROM STEAM AND HOT WATER PIPES, EXCEPT 1 IN. FROM PIPE COVER AT CROSSINGS AND 18 IN. FOR PARALLEL RUNS). FOR HUNG CEILING OUTLETS, RUN IN HUNG CEILING AND CONNECT TO CEILING SUPPORT CHANNELS. IN MASONRY AND POURED CONCRETE, RUN VERTICALLY ONLY.

EMPTY RACEWAYS OVER 10 FT LONG: PROVIDE FISH OR PULL WIRE, GALVANIZED OR NYLON ROPE.

RIGID STEEL CONDUIT SHALL BE PERMITTED FOR FEEDERS AND BRANCH CIRCUITS. PAINT MALE THREADS OF FIELD-THREADED CONDUIT WITH GRAPHITE-BASE PIPE COMPOUND AND BUTT CONDUIT ENDS. TOUCH UP MARRED SURFACES AND FIELD-CUT THREADS, CRC-COLD GALVANIZED. EMT SHALL BE PERMITTED FOR BRANCH CIRCUITS ONLY, IN DRY LOCATIONS, DRY WALLS, HUNG CEILINGS, HOLLOW BLOCK WALLS AND FURRED SPACES. EMT SHALL NOT BE PERMITTED IN RAISED FLOORS. FLEXIBLE STEEL CONDUIT SHALL BE UTILIZED FOR SHORT CONNECTIONS WHERE RIGID CONDUIT IS IMPRACTICAL. FROM OUTLET BOX TO RECESSED LIGHTING FIXTURE: PROVIDE MINIMUM 4 FT AND MAXIMUM 6 FT LENGTHS. FOR FINAL CONNECTION TO MOTOR TERMINAL BOX, TRANSFORMER AND OTHER VIBRATING EQUIPMENT: PROVIDE WITH POLYVINYL SHEATHING AND GROUND CONDUCTOR. MINIMUM LENGTH: 18 IN. WITH SLACK. CONNECT GROUND CONDUCTOR TO ENCLOSURE OR RACEWAY AT EACH END. FOR EXPANSION JOINT CROSSINGS, CROSS AT RIGHT ANGLES AND ANCHOR ENDS.

CUT CONDUIT ENDS SQUARE. REAM SMOOTH. PAINT MALE THREADS OF FIELD THREADED RACEWAYS WITH GRAPHITE BASE PIPE COMPOUND. DRAW UP TIGHT WITH RACEWAY COUPLING.

ALL COUPLINGS SHALL BE COMPRESSION TYPE. NO SET SCREW FITTINGS.

EXPANSION FITTINGS SHALL BE INSTALLED AT RIGHT ANGLES WITH CLIP JOINT CENTERED IN EXPANSION JOINT. PROVIDE A LENGTH OF RUN IN ACCORDANCE MANUFACTURER'S RECOMMENDATIONS. PRESET FITTINGS SHALL ALLOW FOR TEMPERATURE VARIATION.

RACEWAYS PASSING THROUGH FIRE-RATED CONSTRUCTION: SEAL OPENING WITH FIRE SEALANT.

O. PROVIDE CABLE SUPPORTS IN ACCORDANCE WITH THE CALIFORNIA ELECTRICAL CODE 2022. CABLE SUPPORTS SHALL UTILIZE A ONE-PIECE PLUG WITH POZI-GRIP WEDGING PLUG AS MANUFACTURED BY OZ-GEDNEY. TYPE SF SHALL BE USED FOR ARMORED CABLE.

INSTALL CABLE SUPPORTS AT THE TOP OF A VERTICAL RISE AND PROVIDE INTERMEDIATE ADDITIONAL SUPPORTS AS REQUIRED TO LIMIT SUPPORTED CONDUCTOR LENGTHS TO NOT GREATER THAN THOSE SPECIFIED IN TABLE 300.19(A).

P. ERECT WALL AND SWITCH OUTLETS IN ADVANCE OF FURRING AND FIREPROOFING. OUTLET BOXES SHALL BE SET SQUARE AND TRUE WITH BUILDING FINISH. SECURE TO BUILDING STRUCTURE BY ADJUSTABLE STRAP IRON OR GROUT IN WITH MASONRY. VERIFY OUTLET LOCATIONS IN FINISHED SPACES WITH ARCHITECTURAL DRAWINGS OF INTERIOR DETAILS AND FINISHES. PROVIDE BARRIER BETWEEN SWITCHES CONNECTED TO DIFFERENT PHASES FOR VOLTAGES EXCEEDING 150 VOLTS TO GROUND.

Q. PANEL, JUNCTION AND PULL BOXES SHALL BE LOCATED CLEAR OF OTHER TRADES. CONCEAL JUNCTION AND PULL BOXES IN FINISHED WHERE NECESSARY, REROUTE RACEWAYS OR MAKE OTHER ARRANGEMENTS FOR CONCEALMENT. BOXES SHALL BE ACCESSIBLE. SUPPORT BOXES FROM BUILDING STRUCTURE, INDEPENDENT OF CONDUIT. PROVIDE FLOOR-TO-CEILING CHANNELS FOR MOUNTING ON DRYWALL AND LIGHTWEIGHT CONSTRUCTION. OUTLET BOXES FOR FIXTURES RECESSED IN HUNG CEILINGS SHALL BE ACCESSIBLE THROUGH OPENING CREATED BY REMOVAL OF FIXTURE. SECURE TO BLACK IRON SUPPORT. MOTOR TERMINAL BOXES: COORDINATE WITH MOTOR BRANCH CIRCUIT CONDUIT AND WIRING; ADD BOX VOLUME WHERE REQUIRED.

R. FIRE SEALANTS: PROVIDE FOR RACEWAYS AND WIRE PASSING THROUGH FLOOR SLOTS, SLEEVES OR OPENINGS IN FIRE-PARTITIONS ROOMS.

S. PERFORM CONTINUITY TESTS OF RESISTANCE OF FEEDER CONDUITS FROM SERVICE TO POINT OF FINAL DISTRIBUTION USING 1 CONDUCTOR RETURN. MAXIMUM RESISTANCE SHALL BE 25 OHMS.

10. WIRE AND CABLE:

A. PROVIDE WIRE AND CABLE COMPLETE WITH ACCESSORIES. SIZE REFERENCE SHALL BE AWG EXCEPT AS NOTED.

B. CONDUCTORS SHALL BE COPPER, ASTM STANDARD SOLID (NO. 10 AND SMALLER) OR STRANDED (NO. 8 AND LARGER). GENERAL USE CABLING SHALL BE NO. 12 MINIMUM. AT 120 VOLTS AND OVER 100 FT CIRCUIT LENGTH PROVIDE NO. 10 MINIMUM. AT 265 VOLTS AND OVER 200 FT CIRCUIT LENGTH PROVIDE NO. 10 MINIMUM.

C. CONTROL AND ALARM CABLING, EXCEPT AS NOTED, SHALL BE NO. 14 MINIMUM. AT 120 VOLTS AND OVER 200 FT CIRCUIT LENGTH PROVIDE NO. 12 MINIMUM. OTHER VOLTAGES AND PHASES: ADJUST CABLE SIZING AS REQUIRED TO MAINTAIN VOLTAGE DROP. INCREASE RACEWAY SIZES FOR LARGER WIRE AS REQUIRED.

D. INSULATION SHALL BE RUBBER AND THERMOPLASTIC MEETING ASTM AND IPCEA STANDARDS. TYPE THW OR THWN SHALL BE UTILIZED FOR FEEDERS AND BRANCH CIRCUITS EXCEPT AS NOTED. TYPE SFF-2 SHALL BE UTILIZED FOR BRANCH CIRCUITS LOCATED IN WIRING CHANNELS OF CONTINUOUS FLUORESCENT FIXTURES AND IN AMBIENT TEMPERATURES OVER 90 DEG C.FOR UNGROUNDED ISOLATED BRANCH CIRCUITS PROVIDE CROSS-LINKED POLYETHYLENE INSULATION (TYPE XHHW).

E. ARMORED CABLE (BX) SHALL BE UTILIZED FOR BRANCH CIRCUITS IN DRY HOLLOW LOCATIONS, HUNG CEILINGS, AND BLOCK WALLS WHEN USED IN LIEU OF WIRING IN CONDUIT, STATE IN PROPOSAL THAT PRICE IS BASED UPON THE USE OF HOSPITAL GRADE 'BX'.

F. COLOR CODING SHALL BE AS FOLLOWS.

120/208 VOLT SYSTEM:	277/480 VOLT SYSTEM:
BLACK FOR A PHASE	BROWN FOR A PHASE
RED FOR B PHASE	ORANGE FOR C PHASE
BLUE FOR C PHASE	YELLOW FOR C PHASE

1) NEUTRAL WIRE SHALL UTILIZE WHITE OUTER COVERING THROUGHOUT. EQUIPMENT GROUND WIRE SHALL UTILIZE GREEN OUTER COVERING THROUGHOUT.

G. WHERE COLOR-CODED CABLE IS NOT AVAILABLE, CERTIFY IN WRITING AND REQUEST PERMISSION TO OVERLAP CONDUCTORS WITH 6 IN. OF COLOR TAPING IN ACCESSIBLE LOCATIONS.

H. TERMINATIONS, SPLICES AND TAPS UNDER 600 VOLTS: COPPER CONDUCTORS NO. 10 AND SMALLER SHALL UTILIZE COMPRESSION-TYPE OF TWIST-ON SPRING-LOADED CONNECTORS AND CLEAR NYLON-INSULATED COVERING. COPPER CONDUCTORS NO. 8 AND LARGER SHALL UTILIZE MECHANICAL BOLTED PRESSURE OR HYDRAULIC COMPRESSION TYPE USING MANUFACTURER'S RECOMMENDED TOOLING. CABLE LUGS AND CONNECTORS SHALL UTILIZE COMPRESSION TYPE OF SAME METAL AS CONDUCTOR. PROVIDE TO MATCH CABLE, WITH MARKING INDICATING SIZE AND TYPE, COPPER LUG CONNECTIONS TO BUS BARS: USE ANTISEIZE COMPOUND ON TANG.

I. NOT MORE THAN 3 LIGHTING OR CONVENIENCE OUTLET CIRCUITS SHALL BE INSTALLED IN ONE CONDUIT UNLESS OTHERWISE INDICATED. PULL NO THERMOPLASTIC WIRES AT TEMPERATURES LOWER THAN 32 DEG F. PROVIDE SEPARATE RACEWAYS FOR CONDUCTORS OF 120/208 AND 265/460 VOLT SYSTEMS, EXCEPT 460 VOLT MOTOR BRANCH CIRCUIT WIRING AND RELATED 120 VOLT CONTROL WIRING. THERMOPLASTIC WIRES SHALL NOT BE INSTALLED IN COMPUTER AREA RAISED FLOORS.

J. LEAVE WIRES WITH SUFFICIENT SLACK TO PERMIT MAKING FINAL CONNECTIONS.

K. PERFORM CONTINUITY AND INSULATION TESTS. MEGGER TEST 100 PERCENT OF FEEDERS, 10 PERCENT OF BRANCH CIRCUITS AND ALL MOTOR BRANCH CIRCUITS OVER 25 HP.

PERFORM TESTS PRIOR TO CONNECTING EQUIPMENT AND IN PRESENCE OF AUTHORIZED REPRESENTATIVES. SUBMIT WRITTEN REPORT OF RESULTS. CORRECT OR REPLACE CABLE TESTING BELOW MANUFACTURER'S STANDARDS.

11. WIRING DEVICES:

A. WIRING DEVICES SHALL BE SPECIFICATION GRADE UNLESS OTHERWISE SPECIFIED. ALL DEVICES SHALL BE FLUSH MOUNTED, UNLESS OTHERWISE NOTED. PROVIDE COMPLETE MATERIAL AND ACCESSORIES AS NOTED.

B. LOCAL WALL SWITCHES SHALL BE ROCKER TYPE, QUIET OPERATING, RATED 20 AMP, 120/277 VOLT, AC. SIMILAR TO LEVITON DECORA SERIES A5621 (SINGLE POLE), A5623 (3-WAY) AND A5624 (4-WAY).

C. STRAIGHT BLADE RECEPTACLES SHALL BE RESIDENTIAL GRADE DUPLEX CONVENIENCE 125 VOLTS, 2 POLE, 3 WIRE, U GROUND SLOT, DECORA SERIES BY LEVITON. GROUNDED, EXCEPT AS NOTED.

1) SINGLE GANG, RECESSED, DUPLEX RECEPTACLE: TAMPER RESISTANT, 2-POLE, 3-WIRE GROUNDING, 15A, 125V, NEMA 5-20R; LEVITON 689 SERIES (COLOR AS SPECIFIED BY ARCHITECT).

2) USB CHARGER/ DUPLEX TAMPER-RESISTANT RECEPTACLE: TAMPER RESISTANT,

D. DEVICE PLATES: SEE ARCHITECT FOR TYPE. FOR RECEPTACLES WITH OTHER THAN 120 VOLT, INSCRIBED VOLTAGE AVAILABLE.

E. COLORS: COORDINATE COLORS WITH ARCHITECT.

F. MOUNTING ORIENTATION OF RECEPTACLES (HORIZONTAL OR VERTICAL): COORDINATE WITH ARCHITECT.

12. LIGHTING FIXTURES:

A. FIXTURES TO BE AS SPECIFIED BY ARCHITECT AND SHALL BE COMPLETELY FACTORY ASSEMBLED, WIRED AND EQUIPPED WITH ALL NECESSARY SOCKETS, BALLASTS, SUPPORTING HARDWARE AND ACCESSORIES. REFER TO DRAWINGS FOR INDIVIDUAL FIXTURE DESCRIPTIONS.

B. FIXTURE CATALOG NUMBERS USED TO ILLUSTRATE EQUIPMENT TYPE DO NOT NECESSARILY DENOTE REQUIRED MOUNTING EQUIPMENT OR ACCESSORIES. PROVIDE ACCESSORIES TO SUIT.

C. BALLAST: CLASS P, HIGH POWER FACTOR, LOWEST AVAILABLE NEMA RATED NOISE LEVEL, ET1 AND CBM APPROVED. ENERGY SAVING TYPE. TRIGGER START FOR 24-INCH LAMPS AND RAPID START FOR 48-INCH. TWO LAMP BALLASTS; NO THREE LAMP BALLASTS. BALLASTS SHALL BE ADVANCE MAGNETEK, UNIVERSAL OR EQUAL.

D. LED DRIVERS SHALL BE ELECTRONIC TYPE, LABELED AS COMPLIANT WITH RADIO FREQUENCY INTERFERENCE (RFI) REQUIREMENTS OF FCC TITLE 47, PART 15 AND COMPLY WITH NEMA SSL 1 "ELECTRONIC DRIVERS SHALL HAVE A SOUND RATING OF "A", HAVE A MINIMUM EFFICIENCY OF 85% AND BE RATED FOR A THD OF LESS THAN 20% AT ALL INPUT VOLTAGES.

E. DIMMABLE LED DRIVERS SHALL BE CAPABLE OF DIMMING WITHOUT LED STROBING OR FLICKER ACROSS THEIR FULL DIMMING RANGE. PROVIDE TYPE OF LED DRIVER AS PER LIGHTING FIXTURE SCHEDULE, DIMMABLE LED DRIVERS SHALL BE 0-10V WHERE NOT INDICATED.

F. CONTINUOUS ROW, TWO LAMP STRIP FIXTURES SHALL BE STAGGERED TYPE.

G. EXIT SIGNS SHALL BE PRECISION DIE-CAST ALUMINUM HOUSING WITH LASER-FORMED ACRYLIC LEGEND. EXIT SIGNS SHALL COMPLY WITH UL 924 AND BE LOCAL AHJ APPROVED. AC POWERED WITH PREMIUM LONG-LIFE NICKEL CADMIUM BATTERY WITH STANDARD UL LISTED 3-HOUR RUN TIME OR AS REQUIRED. PROVIDE WITH INTEGRAL AUTOMATIC CHARGER IN A SELF CONTAINED POWER PACK. LED INDICATOR WITH PUSH TO TEST SWITCH.

13. TELEPHONE CONDUIT SYSTEM:

A. PROVIDE COMPLETE SYSTEM OF: RACEWAYS AND ACCESSORIES, OUTLET BOXES, SLEEVES AND FISHWIRES.

B. EQUIPMENT SHALL CONFORM TO REQUIREMENTS OF TELEPHONE COMPANY.

C. OUTLETS SHALL BE:

1) WALL: 4 IN. SQUARE WITH BUSHED COVER PLATE.

D. PROVIDE FISHWIRES, IN RACEWAYS OVER 10 FT LONG.

E. CONDUIT SHALL BE 3/4 IN. MINIMUM. FURNISH EMPTY CONDUIT FROM OUTLET BOX TO BUSHED END THRU WALL 6" BELOW THE PLASTER CEILING.

F. FACE RACEWAYS IN ROOMS SHALL HUBBELL HBL500, HBL750 OR HBL2000 SERIES OR AS ACCEPTABLE.

14. PANELBOARDS:

A. PANELBOARDS SHALL BE OF THE DEAD FRONT TYPE MANUFACTURED IN CODE GAUGE AND SIZE BOXES FOR MOUNTING AS INDICATED ON PLANS COMPLETE WITH TRIM, DOORS AND LOCKS. ALL LOCKS SHALL BE KEYED ALIKE.

B. CIRCUIT BREAKERS SHALL BE OF THE BOLT-ON THERMAL MAGNETIC MOLDED CASE TYPE, AND SHALL HAVE THE TRIP RATINGS AND NUMBER OF POLES SHOWN IN SCHEDULES ON THE CONTRACT DRAWINGS. FOR BLANK (SPACE) COMPARTMENTS, PROVIDE FULL RATED BUS. MINIMUM GUTTER SPACES SHALL BE 5-3/4". SIDES, TOP AND BOTTOM, INCREASE FOR THROUGH FEEDERS. PROVIDE 25% COPPER GROUND BUS AND 100% COPPER NEUTRAL BUS AND INCREASE NEUTRAL BUS INDICATED.

C. LOCKING TABS SHALL BE PROVIDED ON ALL CIRCUIT BREAKERS SERVING EMERGENCY LIGHTING, FIRE ALARM SYSTEM, SECURITY, SYSTEMS AND OTHER EMERGENCY OR CRITICAL EQUIPMENT AND AS NOTED ON THE CONTRACT DRAWINGS. A TOTAL OF 5 SPARE LOCKING TABS SHALL BE FURNISHED TO THE OWNER.

D. BUSES SHALL BE HARD DRAWN COPPER OF 98 PERCENT CONDUCTIVITY AND SHALL HAVE CROSS SECTIONAL AREAS LARGE ENOUGH TO LIMIT THE TEMPERATURE RISE, WHEN CARRYING FULL LOAD, TO 35 DEGREES C. ABOVE AN AMBIENT INSIDE THE ENCLOSURE OF 55 DEGREES C. AS DEFINED IN IEEE STANDARD RULES. MAIN BUS CAPACITY SHALL BE AS SHOWN ON THE CONTRACT DRAWINGS.

E. ENCLOSURES SHALL BE SURFACE OR FLUSH AS INDICATED. TRIMS SHALL BE SECURED TO PANEL WITH MACHINE SCREWS. COVERS SHALL BE HINGED DOOR-IN-DOOR, CONSTRUCTION WITH CYLINDER LOCKS AND CATCHES. LOCKS MUST BE COMPATIBLE WITH BUILDING STANDARD KEY SYSTEM AND WHEN NONE EXISTS, THEY SHALL BE SIMILAR TO A YALE NO. 911 KEY.

F. DISTRIBUTION AND SUB-DISTRIBUTION PANELBOARD SHALL BE A MINIMUM OF 30" WIDE AND 10" DEEP.

G. ALL STANDARD PANELBOARDS SHALL BE A MINIMUM OF 20" WIDE AND 5 3/4" DEEP.

H. FURNISH ALL PANELBOARDS WITH FEED-THRU LUGS UNLESS OTHERWISE INDICATED ON THE DRAWINGS.

I. ALL NEW PANELBOARDS SHALL BE PROVIDED WITH AN ENGRAVED WHITE CORE LAMACOID NAMEPLATE, WITH 3/4 IN. WHITE LETTERING ON A BLACK BACKGROUND, WITH DESIGNATION LISTED (PANELBOARD NAME), FASTENED WITH EPOXY CEMENT OR OVAL HEAD CHROME PLATED MACHINE SCREWS.

J. THE CIRCUIT DIRECTORY SHALL BE TYPEWRITTEN AND PROVIDED INSIDE EACH PANEL DOOR TO INDICATE EQUIPMENT AND/OR AREA SERVED. DIRECTORY HOLDER SHALL BE METAL FRAME WITH CLEAR PLASTIC, TRANSPARENT COVER. THE TYPEWRITTEN LIST INDICATING CIRCUIT NUMBERS, OUTLETS SUPPLIED AND THEIR LOCATIONS SHALL BE PROVIDED.

K. TIE-BARS SHALL NOT BE USED TO CREATE MULTI-POLE CIRCUITS. MAXIMUM 42 CIRCUITS ALLOWED.

L. ONLY ONE WIRE SHALL BE INSTALLED UNDER EACH CIRCUIT BREAKER LUG.

M. SHORT CIRCUIT RATING OF PANELBOARDS SHALL NOT BE LESS THAN AS INDICATED ON THE CONTRACT DRAWINGS OR SPECIFIED HEREIN. WHERE NOT INDICATED OR SPECIFIED THE MINIMUM SHORT CIRCUIT RATING SHALL BE EQUAL TO THE INTERRUPTING CAPACITY OF THE LOWEST RATED CIRCUIT BREAKER IN THE PANELBOARD, BUT IN NO CASE LESS THAN 10,000 AMPERES R.M.S. SYMMETRICAL FOR 208Y/120 VOLT SYSTEM AND 14,000 AMPERES R.M.S. SYMMETRICAL FOR 480Y/277 VOLT SYSTEM. SERIES RATED PANELBOARDS SHALL BE USED TO ACHIEVE REQUIRED SHORT CIRCUIT RATINGS.

N. FOR ALL EXISTING PANELBOARDS, CONTRACTOR SHALL PROVIDE NEW CIRCUIT BREAKERS TO REPLACE EXISTING AS REQUIRED AS INDICATED ON DRAWINGS.

15. INTERCOM CONDUIT SYSTEM:

A. PROVIDE COMPLETE SYSTEM OF: RACEWAYS AND ACCESSORIES, OUTLET BOXES, SLEEVES AND FISHWIRES.

B. EQUIPMENT SHALL CONFORM TO REQUIREMENTS OF INTERCOM MANUFACTURER.

C. OUTLETS SHALL BE:

1)WALL: 4 IN. SQUARE WITH SINGLE GANG COVER PLATE.

D. PROVIDE FISH WIRES, IN RACEWAYS OVER 10 FT LONG.

E. CONDUIT SHALL BE 3/4 IN. MINIMUM. FURNISH EMPTY CONDUIT FROM EACH APARTMENT TO MAIN INTERCOM CONTROLLER AT ENTRANCE.

Property of NY Engineers

DESIGN PROFESSIONAL
NY ENGINEERS
382 NE 191st Street Suite 49674
MIAMI, FL 33179
(786)-788-0295
ny-engineers.com

DATES	
07-23-2025	ISSUED FOR PERMIT

PROJECT

TITLE

ELECTRICAL SPECIFICATIONS (2 OF 2)

SHEET NO.

E0.3

LIGHTING FIXTURE SCHEDULE

TYPE	DESCRIPTION	VOLTAGE	LIGHT SOURCE	CCT	FIXTURE WATTS	MANUFACTURER / MODEL NUMBER
INTERIOR						
F1	8" DIA. LOW BAY LED POST HUNG INDUSTRIAL ON DIMMER	277V	LED	4,000K	100 VA	SATCO CATALOG #SAT 65-791R2
F2	4" RECESSED LED WITH WHITE TRIM ON DIMMER	277V	LED	4,000K	18 VA	ELCO CATALOG #ELC EL475CT5DW/EL490ICDXA
F3	6" DIA. LED PENDANT ON DIMMER	277V	LED	4,000K	60 VA (MAX)	LIGHTING-FOREST CATALOG #RATTAN PENDANT LIGHT WABI-SABI CREATIVE PENDANT FIXTURE - STYLE C
F4	24" X 24" FLAT PANEL LED	277V	LED	4,000K	37 VA	ORACLE LIGHTING CATALOG #ELI 22-FPL-BL-2000L/3000L/4000L-DIM10-MVOLT-35K/40K/50K-85
F5	20" DIA. LED PENDANT LAMP FIXTURE ON DIMMER	220-250V	LED	4,000K	100 VA (MAX)	LIGHTING-FOREST CATALOG #RATTAN PENDANT LIGHT BOHO KITCHEN ISLAND LIGHTING
EMERGENCY						
EM	EMERGENCY DUAL-HEAD FIXTURE WITH BATTERY BACK UP	277V	LED	-	3 VA	MAXILUM LIGHTING /ELM-LED-803-FINISH (OR EQUAL)
EX	THERMOPLASTIC LED EXIT SIGN COMBO WITH HEADS, AND HIGH OUTPUT BATTERY	277V	LED	-	4 VA	MAXILUM LIGHTING /ELM-LED-882-FINISH (OR EQUAL)

GENERAL NOTES:

1. BATTERY PACKS FOR ALL EXIT, NIGHT LIGHT AND EMERGENCY LIGHT FIXTURES SHALL BE CAPABLE OF PROVIDING EMERGENCY POWER TO THE FIXTURES FOR A MINIMUM OF 90 MINUTES.
2. E.C. SHALL COORDINATE EXACT MAKE/MODEL, COLOR, FINISH & CCT OF LIGHTING FIXTURES WITH ARCHITECT/OWNER IN FIELD.
3. FIXTURE MODEL NUMBER MAY NOT REFLECT ALL MOUNTING HARDWARE. ELECTRICAL CONTRACTOR SHALL PROVIDE ALL NECESSARY MOUNTING EQUIPMENT, LENSES, STEMS, SAFETY CHAINS, END PLATES, AND ALL OTHER HARDWARE NECESSARY FOR A COMPLETE FIXTURE INSTALLATION. SEE MOUNTING DETAILS WHEN APPLICABLE.
4. LINE VOLTAGE DRIVERS MAY BE SUBSTITUTED FOR "UNIVERSAL" OR "MULTI-VOLTAGE" DRIVERS.
5. ALL FIXTURES SHALL BE UL OR ETL LISTED.

LIGHTING PLAN GENERAL NOTES:

1. CONTRACTOR IS ADVISED THAT ADJUSTMENTS TO EMERGENCY AND EXIT LIGHT FIXTURE LOCATIONS/QUANTITIES MAY BE REQUIRED BY AHJ UPON FINAL INSPECTION.
2. ALL EXTERIOR LIGHTS AND SIGNS SHALL BE CONTROLLED VIA PHOTOCELL AND/OR TIME CLOCK. THE ELECTRICAL CONTRACTOR (E.C.) SHALL PROVIDE ALL LIGHTING CONTROLS IN COMPLIANCE WITH THE 2022 CALIFORNIA ENERGY CODE. AND THE REQUIREMENTS OF THE LOCAL AUTHORITY HAVING JURISDICTION (AHJ).
3. REFER TO DWG. E0.1 FOR ELECTRICAL GENERAL NOTES, SYMBOL LIST, ABBREVIATIONS AND E0.2 AND E0.3 FOR ADDITIONAL SPECIFICATIONS.
4. FINAL CONDUIT/CABLE ROUTING SHALL BE DETERMINED IN-FIELD, AND PRIOR TO THE COMMENCEMENT OF WORK, COORDINATED WITH OTHER TRADE CONTRACTORS AND THE TENANT.
5. LAY-IN TYPE FIXTURES SHALL BE SUPPORTED FROM THE STRUCTURE INDEPENDENT FROM THE CEILING SYSTEM AND BE CLIPPED TO THE GRID WITH EARTHQUAKE/HURRICANE CLIPS.
6. ALL SWITCHES QUANTITIES, LOCATION AND MOUNTING DETAILS SHALL BE COORDINATED WITH ARCHITECT/OWNER IN THE FIELD.

LIGHTING PLAN KEYED NOTES:

1. WIRE ALL EMERGENCY AND EXIT LIGHT TO THE DEDICATED CIRCUIT (A:1) AHEAD OF ALL CONTROLS & SWITCHING FOR CONTINUOUS OPERATION.
2. E.C. SHALL COORDINATE THE EXACT LOCATION & MAKE / MODEL OF TIME CLOCK WITH ARCHITECT / OWNER IN FIELD. SEE DETAIL-3 THIS SHEET FOR ADDITIONAL INFORMATION.
3. WALL MOUNTED DIMMER SWITCH HUBBELL CONTROL SOLUTIONS CATALOG #LHMTS1-G-WH (OR EQUAL), COORDINATE EXACT MAKE/MODEL WITH ARCHITECT/OWNER IN COORDINATION WITH EQUIPMENT MANUFACTURER IN FIELD. BASE BID ACCORDINGLY.
4. PROVIDE DIGITAL IN-WALL TIMER SWITCH, PROGRAMMABLE 7 DAY CONTROL. LITHIUM BATTERY BACKUP FOR TIMEKEEPING. MANUAL OVERRIDE CONTROL FOR MAXIMUM 2 HOURS. EQUAL TO INTERMATIC ST01 SERIES (OR EQUAL). ADJUST TO ON/OFF SCHEDULE DIRECTED BY AUTHORIZED REPRESENTATIVE FOR TENANT.
5. SWITCH FOR CONTROL OF "SHOW WINDOW" OUTLET. E.C. TO COORDINATE EXACT LOCATION & MAKE/MODEL OF SWITCH WITH ARCHITECT/OWNER IN COORDINATION WITH DEVICE MANUFACTURER IN FIELD. BASE BID ACCORDINGLY.
6. PROVIDED LIGHTING CONTROL SWITCH BANK. ELECTRICAL CONTRACTOR TO VERIFY SWITCH BANK WILL FIT WITHIN SPECIFIED AREA AND STACK MULTIPLE SWITCH BANKS AT THIS LOCATION IF A SINGLE SWITCH BANK WILL NOT FIT WITHIN THE SPECIFIED REGION. E.C. SHALL LABEL EACH SWITCHES WITH EACH AREA THEY ARE CONTROLLING.
7. EXTERIOR SIGNS CONTROLLED VIA PHOTOCELL. E.C. SHALL COORDINATE EXACT MAKE/MODEL OF PHOTOCELL WITH EQUIPMENT MANUFACTURER. E.C. SHALL ADJUST PHOTOCELL QUANTITIES AS RECOMMENDED BY MANUFACTURER. BASE BID ACCORDINGLY.
8. LIGHT FIXTURE NEAR ELECTRICAL PANEL SHALL NOT BE CONTROLLED BY ANY AUTOMATIC MEANS AND SHALL BE COMPILED AS PER CEC 110.26(D).

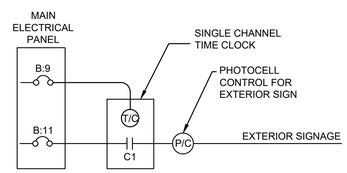

3 E1.0 TIME CLOCK DETAIL
SCALE: N.T.S.

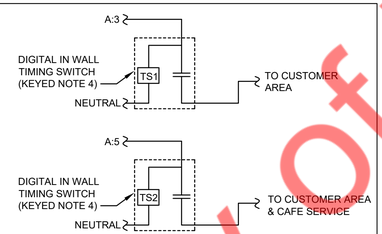

4 E1.0 TIMER SWITCH CONTROL DETAIL
SCALE: N.T.S.

^{TS1}	$^{3}_{a}$	^{TS2}	$^{3}_{b}$	$^{3}_{c}$	$_{d}$
A:3	A:3	A:5	A:5	A:7	B:13
DIGITAL IN WALL TIMER SWITCH (T1)	CUSTOMER AREA	DIGITAL IN WALL TIMER SWITCH (T2)	CUSTOMER AREA & CAFE SERVICE	PREP, DISHWASH & STORAGE	SHOW WINDOW

NOTE: E.C. SHALL COORDINATE EXACT MAKE/MODEL/COLOR OF DIMMER, TIMER & MANUAL SWITCH AND COVER PLATES WITH ARCHITECT/OWNER IN FIELD.

2 E1.0 SWITCH BANK DETAIL
SCALE: N.T.S.

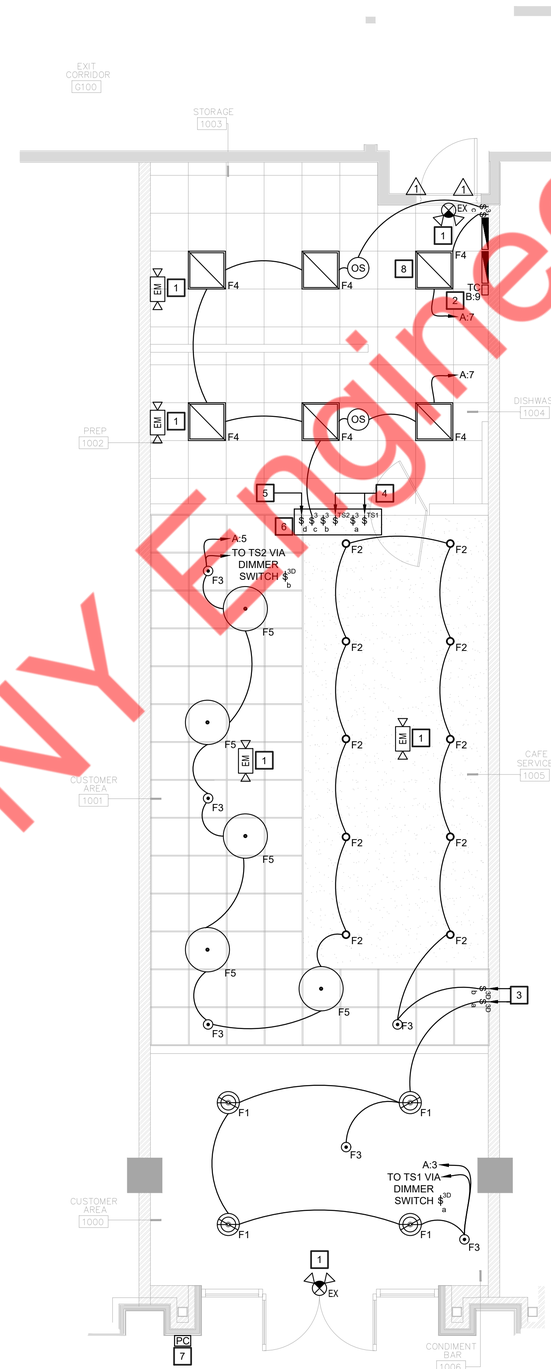

1 E1.0 LIGHTING FLOOR PLAN
SCALE: 1/4"=1'-0"

0 5 10 15
SCALE BAR 1/4"=1'-0"

Property of NY Engineers

DESIGN PROFESSIONAL
NY ENGINEERS
382 NE 191st Street Suite 49674
MIAMI, FL 33179
(786)-788-0295
ny-engineers.com

DATES

LL COMMENTS #1 2025.08.20

PROJECT

TITLE

LIGHTING FLOOR PLAN

SHEET NO.

E1.0

EQUIPMENT SCHEDULE

ITEM #	DESCRIPTION	VOLTAGE/PH	AMPERAGE	WATTAGE	ELECTRICAL CONNECTION	OUTLET MOUNTING
1	REFRIGERATED SELF-SERVICE CASE	115V/1PH	11.35A	1305W	5-15P	+18"
3	COFFEE GRINDER	120V/1PH	4.83A	580W	5-15P 6	+25"
6	ESPRESSO SYSTEM	208V/1PH	15.38A	3200W	6-20P	+18"
8	ELECTRIC CHIMNEY CAKE OVEN	208V/1PH	15.38A	3200W	J-BOX 6	+44"
10	STEAM SYSTEM	208V/1PH	17.30A	3600W	6-20P	+18"
11	POUR OVER COFFEE	208V/1PH	16.00A	3328W	6-20P 6	+18"
12	GRINDER	120V/1PH	1.16A	200W	5-15P 6	+18"
13	HOT WATER TAP	110V/1PH	12.72A	1400W	5-15P 6	+18"
14	UNDERCOUNTER REFRIGERATOR	115V/1PH	3.0A	345W	5-15P	+18"
16	BLENDER, BEVERAGE	120V/1PH	15.0A	1800W	5-15P	+48"
17	UC ICE MACHINE	115V/1PH	5.8A	667W	5-15P	+18"
19	MIXER, COUNTER	115V/1PH	14.0A	1610W	5-15P	+18"
23	CONVECTION OVEN	208V/1PH	20.0A	2700W	6-20P 6	+18"
34	REACH-IN REFRIGERATOR	115V/1PH	5.4A	621W	5-15P	+18"
42	WAREWASHER	115V/1PH	13.2A	1518W	5-15P 6	+18"
GU1	CONVENIENCE RECEPTACLE	120V/1PH	-	-	-	+18"
GU2	CONVENIENCE RECEPTACLE	120V/1PH	-	-	-	+48"
KIOSK	SELF SERVE KIOSK	115V/1PH	-	-	-	+18"
POS	POS REGISTER	115V/1PH	-	-	-	+18"
PRNT	PRINTER	120V/1PH	1.50A	-	-	+18"
WH-1	WATER HEATER	480V/3PH	21.7A	18000W	DISCONNECT	+96"

GENERAL NOTES:

1. COORDINATE ALL MOUNTING HEIGHTS WITH OWNER PRIOR TO INSTALL.
2. COORDINATE EXACT OUTLET REQUIREMENT AND OTHER ELECTRICAL DETAILS (AMPERAGE/VOLTAGE/PHASE) WITH EQUIPMENT MANUFACTURE PRIOR TO PURCHASE & BID.

POWER PLAN GENERAL NOTES:

A. COORDINATE EXACT LOCATION OF HVAC EQUIPMENTS ON ABOVE CEILING WITH MECHANICAL CONTRACTOR.

B. E.C. SHALL COORDINATE OUTLET/DISCONNECT REQUIREMENT FOR MECHANICAL/PLUMBING UNIT WITH MECHANICAL/PLUMBING CONTRACTOR AND EQUIPMENT MANUFACTURER FOR FINAL SELECTION PRIOR TO ROUGH-IN.

C. REFER TO DWG. E0.1 FOR ELECTRICAL GENERAL NOTES, SYMBOL LIST, ABBREVIATIONS AND E0.2 AND E0.3 FOR ADDITIONAL SPECIFICATIONS.

D. FINAL CONDUIT/CABLE ROUTING SHALL BE DETERMINED IN-FIELD, AND PRIOR TO THE COMMENCEMENT OF WORK, COORDINATED WITH OTHER TRADE CONTRACTORS AND THE TENANT.

E. E.C. SHALL COORDINATE EXACT RECEPTACLE/OUTLET/DISCONNECT TYPE FOR EQUIPMENT WITH EQUIPMENT VENDOR/MANUFACTURER.

F. ALL WIRING TO BE #12AWG WITH #12AWG GND IN 3/4" CONDUIT UNLESS OTHERWISE NOTED OR REQUIRED.

G. ALL 125-VOLT THROUGH 250-VOLT RECEPTALCES SUPPLIED BY SINGLE-PHASE BRANCH CIRCUITS RATED 150 VOLTS OR LESS TO GROUND, 50 AMPERES OR LESS, AND ALL RECEPTACLES SUPPLIED BY THREE-PHASE BRANCH CIRCUITS RATED 150 VOLTS OR LESS TO GROUND, 100 AMPERES OR LESS LOCATED IN KITCHEN, DRIVE-THRU, AND FOOD PREP AREAS SHALL BE GFCI PROTECTION PER THE 2022 CALIFORNIA ELECTRICAL CODE SECTION 210.8B.

H. VERIFY ALL EXPOSED CONDUIT ROUTING WITH ARCHITECT/ENGINEER WHERE CONDUIT IS EXPOSED IN FINISHED ROOMS.

I. DETAIL REFERENCES ON PLANS ARE TO AID THE CONTRACTOR IN IDENTIFYING THE APPLICABLE DETAIL. NOT ALL DETAILS, OR INSTANCES OF DETAILS, ARE REFERENCES ON PLANS. CONTRACTOR IS RESPONSIBLE TO REVIEW AND COMPLY WITH ALL APPLICABLE DETAILS WHETHER OR NOT REFERENCED ON PLANS.

J. ALL 120V, 1P 15 & 20 AMP RECEPTACLES IN THE KITCHEN AREA SHALL BE GFCI TYPE AND MOUNTED IN A READILY ACCESSIBLE LOCATION. READILY ACCESSIBLE IS DEFINED AS NOT HAVING TO MOVE ANY EQUIPMENT IN ORDER TO RESET OR TEST THE GFCI RECEPTACLE.

K. E.C. TO COORDINATE WITH OWNER REGARDING EXTERIOR SIGNAGE VOLTAGE/AMPACITY REQUIREMENTS BEFORE PURCHASING AND INSTALLING CONDUIT, WIRE AND CIRCUIT BREAKERS. COORDINATE CONTROL OF SIGNAGE WITH OWNER/TENANT.

L. E.C. SHALL PROVIDE AND INSTALL ALL DISCONNECT SWITCHES, RECEPTACLES, CONCEALED WIRING, ETC. TO KITCHEN EQUIPMENT AS REQUIRED. E.C. SHALL ALSO PROVIDE ALL CORDS, FITTINGS, BOXES, CORD GRIPS, PLUGS, CABLES, ETC. ON EQUIPMENT REQUIRING SUCH ITEMS.

POWER PLAN KEYED NOTES:

1. E.C. TO INSTALL SHOW WINDOW RECEPTACLES AS PER THE 2022 CALIFORNIA ELECTRICAL CODE SECTION 210.62. COORDINATE EXACT LOCATION OF OUTLET IN FIELD WITH ARCHITECT/OWNER BEFORE COMMENCEMENT OF ANY WORK.
2. ALL RECEPTACLES IN THIS AREA SHALL BE TAMPER RESISTANCE AS PER THE 2022 CALIFORNIA ELECTRICAL CODE SECTION 406.12.
3. PROVIDE JUNCTION BOX WITH LOCAL TOGGLE SWITCH DISCONNECT LOCATED ABOVE ACCESSIBLE CEILING AND ASSOCIATED 120V, 1Ø, 20 AMP CIRCUIT(S) FOR SIGNAGE. FIELD VERIFY EXACT ROUGH-IN LOCATION. CIRCUIT THRU TIME CLOCK FOR AUTOMATIC ON/OFF CONTROL OF THE SAME.
4. E.C. SHALL FIELD VERIFY THAT ALL ELECTRICAL PANELS ARE UNOBSTRUCTED. THE AREA IN FRONT OF ELECTRICAL PANELS SHALL NOT BE USED FOR STORAGE. WORKING SPACE SHALL BE PROVIDED IN ACCORDANCE WITH THE 2022 CALIFORNIA ELECTRICAL CODE SECTION 110.26(A). ALSO, E.C. SHALL PROVIDE SIGNAGE AND FLOOR MARKINGS INDICATING THE CLEAR SPACE IN FRONT OF THE ELECTRICAL PANELS.
5. ELECTRICAL POWER PROVISION FOR MECHANICAL/PLUMBING EQUIPMENT. E.C. SHALL COORDINATE EXACT POWER AND ELECTRICAL OUTLET/DISCONNECT REQUIREMENT FOR MECHANICAL/PLUMBING EQUIPMENT WITH EQUIPMENT MANUFACTURER IN COORDINATION WITH ARCHITECT/OWNER IN THE FIELD PRIOR TO ROUGH-IN. BASE BID ACCORDINGLY.
6. E.C. SHALL COORDINATE EXACT RECEPTACLE/OUTLET/DISCONNECT TYPE FOR EQUIPMENT WITH EQUIPMENT VENDOR/ MANUFACTURER BEFORE COMMENCEMENT OF WORK, MAKE POWER PROVISION ACCORDINGLY & BASE BID ACCORDINGLY.
7. E.C. SHALL COORDINATE EXACT POWER REQUIREMENT FOR THE TAPE LIGHT WITH THE LIGHT MANUFACTURER AS PER THE SPECIFICATION. E.C. SHALL PROCURE ALL THE ACCESSORIES NEEDED FOR THE PROPER FUNCTION OF TAPE LIGHT. BASE BID ACCORDINGLY. 1
8. OAF-1 SHALL BE INTERLOCKED WITH AC-1, AC-2 & AC-3. E.C SHALL COORDINATE EXACT INTERLOCKING REQUIREMENTS WITH MECHANICAL CONTRACTOR.
9. E.C. SHALL ENSURE THE FEEDER FROM TRANSFORMER SECONDARY SHOULD NOT EXCEED 10FT AS PER CEC 240.21(C) TILL THE 200A FUSED DISCONNECT SWITCH, LAY CONDUIT/FEEDER ACCORDINGLY.

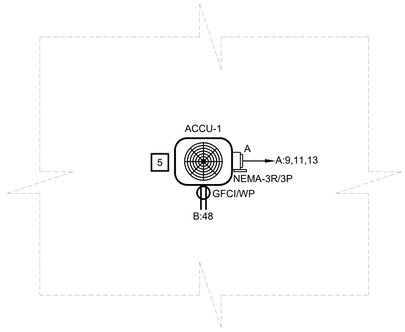

PARTIAL LOW ROOF LEVEL 3
ELECTRICAL PLAN

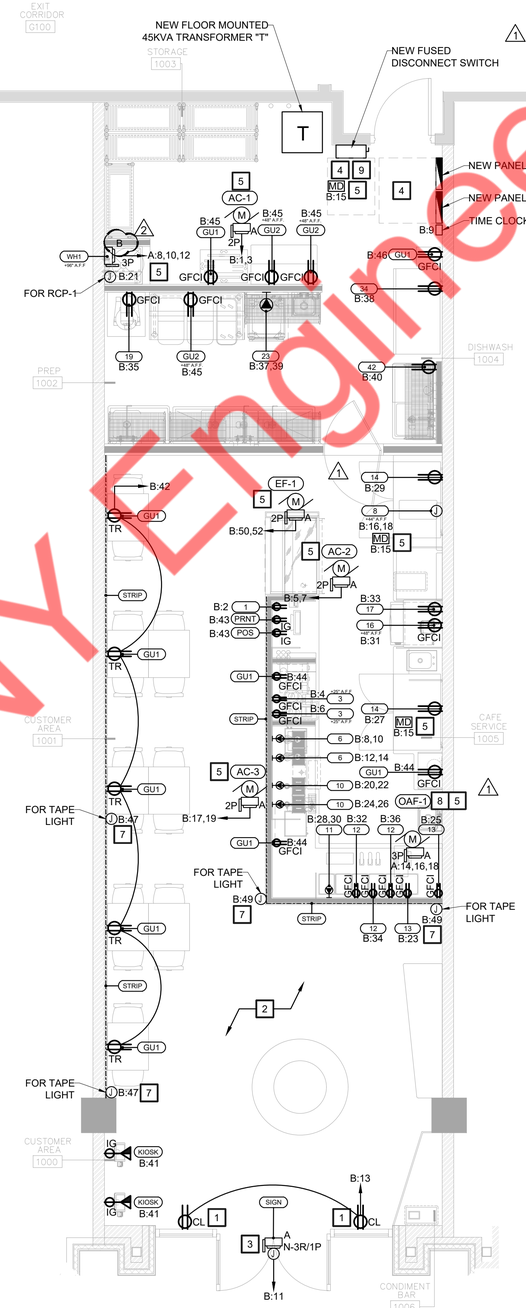

1 POWER FLOOR PLAN
E2.0 SCALE: 1/4"=1'-0"

0 5 10 15
SCALE BAR 1/4"=1'-0"

Property of NY Engineers

DESIGN PROFESSIONAL
NY ENGINEERS
382 NE 191st Street Suite 49674
MIAMI, FL 33179
(786)-788-0295
ny-engineers.com

DATES

HEALTH COMMENTS #2	2025.09.01
LL COMMENTS #1	2025.08.20

PROJECT

TITLE

POWER FLOOR PLAN

SHEET NO.

E2.0

NOTE:
THIS INFORMATION MAY NOT CONTAIN ALL DETAILS REQUIRED FOR CONSTRUCTION. APPROPRIATE MODIFICATION MAY BE REQUIRED TO ENSURE SUITABILITY OF THESE DRAWINGS FOR THE SPECIFIC APPLICATION. IT IS THE USER'S RESPONSIBILITY TO ENSURE INSTALLATION OF THE EQUIPMENT/SYSTEM IS IN ACCORDANCE WITH BUILDING/PROJECT SPECIFICATIONS, APPLICABLE CODES AND STANDARDS.

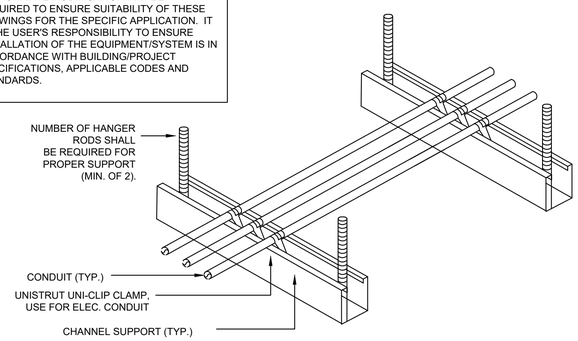

NOTES:

1. ALL CONDUIT MAY BE COMBINED ON SAME SUPPORT CHANNEL WHERE PRACTICAL.
2. SUPPORT CHANNEL LENGTH SHALL NOT BE DETERMINED UNTIL ALL PIPING, CONDUIT, ETC. TO BE SUPPORTED IS COORDINATED.
3. SUPPORT CHANNEL SPACING SHALL BE NO MORE THAN 10'-0".
4. UNISTRUT AND CONDUIT INSTALLATION MAY BE REVERSED.

1 E3.0 CONDUIT SUPPORT DETAIL
SCALE: N.T.S.

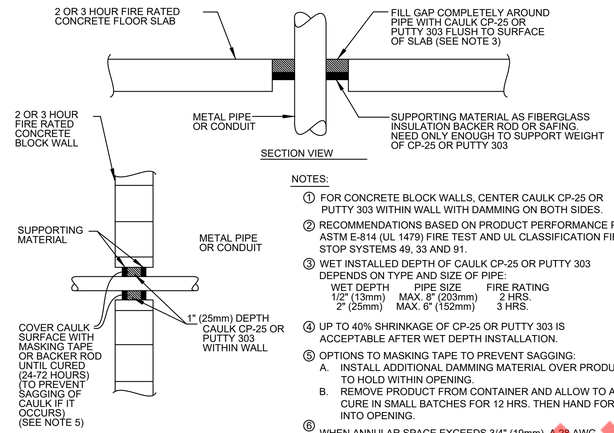

NOTES:

① FOR CONCRETE BLOCK WALLS, CENTER CAULK CP-25 OR PUTTY 303 WITHIN WALL WITH DAMMING ON BOTH SIDES.

② RECOMMENDATIONS BASED ON PRODUCT PERFORMANCE PER ASTM E-814 (UL 1479) FIRE TEST AND UL CLASSIFICATION FIRE STOP SYSTEMS 49, 33 AND 91.

③ WET INSTALLED DEPTH OF CAULK CP-25 OR PUTTY 303 DEPENDS ON TYPE AND SIZE OF PIPE:

WET DEPTH	PIPE SIZE	FIRE RATING
1/2" (13mm)	MAX. 8" (203mm)	2 HRS.
2" (25mm)	MAX. 6" (152mm)	3 HRS.

④ UP TO 40% SHRINKAGE OF CP-25 OR PUTTY 303 IS ACCEPTABLE AFTER WET DEPTH INSTALLATION.

⑤ OPTIONS TO MASKING TAPE TO PREVENT SAGGING:
A. INSTALL ADDITIONAL DAMMING MATERIAL OVER PRODUCT TO HOLD WITHIN OPENING.
B. REMOVE PRODUCT FROM CONTAINER AND ALLOW TO AIR CURE IN SMALL BATCHES FOR 12 HRS. THEN HAND FORM INTO OPENING.

⑥ WHEN ANNULAR SPACE EXCEEDS 3/4" (19mm), A 28 AWG METAL COVER PLATE MUST BE MECHANICALLY SECURED ATOP THE 3M FIRE BARRIER APPLICATION, OR TIGHTLY PACK A NON-COMBUSTIBLE DAMMING MATERIAL ATOP INSTALLED CAULK OR PUTTY.

2 E3.0 FIRE STOP DETAIL
SCALE: N.T.S.

AUTOMATIC MODE OPERATION:

1. WHEN SENSOR ACTIVATES, LOAD TURNS ON.
2. LOAD TURNS OFF, WITHIN 20 MINUTES OF OCCUPANT LEAVING SPACE.
3. SWITCHES CAN BE USED TO TURN LOAD OFF.

RECOMMENDED WIRE:

18-3 AWG STRANDED WIRE SHIELDED OR NON-SHIELDED

SENSOR TYPES INCLUDE:

OAC-DT-0501, OAC-DT-1000, OAC-DT-2000
OAC-U-0501, OAC-U-1000, OAC-U-2000
OAC-P-0500, OAC-P-1500 OR EQUAL

SWITCHPACK TYPE INCLUDES:

SP20-MV OR EQUAL

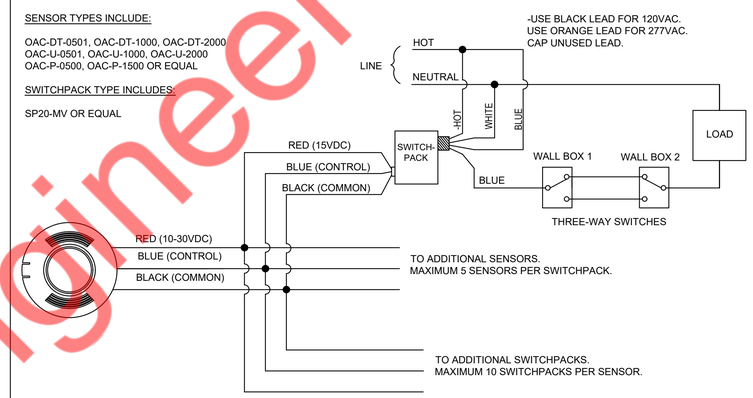

3 E3.0 LOW VOLTAGE CEILING SENSOR WITH THREE-WAY SWITCHING
SCALE: N.T.S.

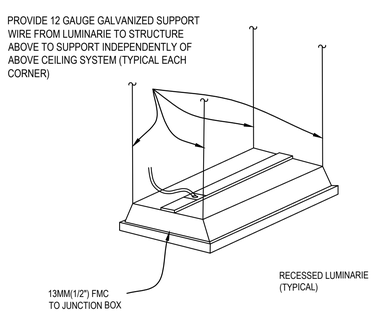

NOTES:

1. ALL INSTALLATION SHALL BE DONE AS PER MANUFACTURERS RECOMMENDATIONS.

4 E3.0 RECESSED LUMINARE DETAIL
SCALE: N.T.S.

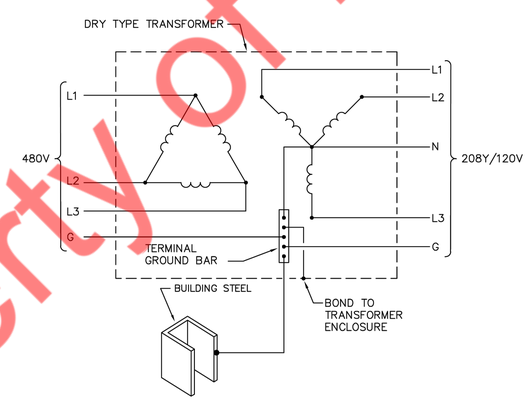

480 VOLT Δ TO 208Y/120V

NOTES:

1. ALL INSTALLATION SHALL BE DONE AS PER MANUFACTURERS RECOMMENDATIONS.

5 E3.0 TRANSFORMER GROUNDING DETAIL
SCALE: N.T.S.

2

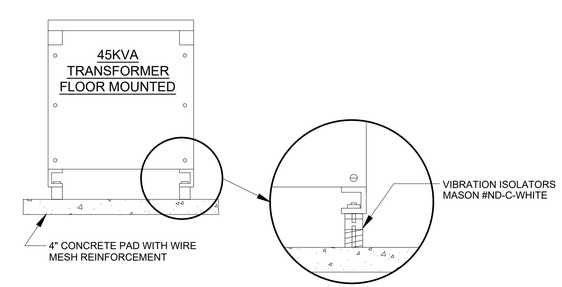

NOTES:

1. PROVIDE 4" CONCRETE HOUSE KEEPING PAD UNDER EACH FLOOR MOUNTED TRANSFORMER WITH WIRE MESH REINFORCING.
2. MOUNT TRANSFORMER TO PAD ON DOUBLE DEFLECTION NEOPRENE FLOOR MOUNTS MASON INDUSTRY #ND-C-WHITE.

6 E3.0 FLOOR MOUNT TRANSFORMER DETAIL
SCALE: N.T.S.

Property of NY Engineers

DESIGN PROFESSIONAL
NY ENGINEERS
382 NE 191st Street Suite 49674
MIAMI, FL 33179
(786)-788-0295
ny-engineers.com

DATES

HEALTH COMMENTS #2 2025.09.01

PROJECT

TITLE

ELECTRICAL DETAILS

SHEET NO.

E3.0

PANEL: A (NEW)					MOUNTING: SURFACE
277/480V	VOLTS,	3 PHASE,	4 WIRE		LOCATION DISHWASH
MAIN CB 100A		MLO: NA	BUS: 125A		FED FROM EXISTING ELECTRICAL SERVICE

CKT NO.	TRIP AMPS	DESCRIPTION OF LOAD	LOAD TYPE	LOAD (KVA)	MINIMUM BRANCH CIRCUIT	PER PHASE (KVA) A	B	C	MINIMUM BRANCH CIRCUIT	LOAD (KVA)	LOAD TYPE	DESCRIPTION OF LOAD	TRIP AMPS	CKT NO.
1	20	EXIT & EMERGENCY LIGHTING	L	0.20	2#12, #12G, 3/4"C	17.65			3#4, #8G, 1 1/4"C	17.45	O	45 KVA TRANSFORMER "T"	3P-70	2
3	20	CUSTOMER AREA LIGHTING	L	0.45	2#12, #12G, 3/4"C		14.53			14.08	O			4
5	20	CUSTOMER AREA & CAFÉ SERVICE AREA LIGHTING	L	0.45	2#12, #12G, 3/4"C			15.22		14.77	O			6
7	20	PREP, DISHWASH & STORAGE AREA LIGHTING	L	0.22	2#12, #12G, 3/4"C	8.22			3#8, #10G, 3/4"C	8.00	O	WATER HEATER (WH-1)	3P-40	8
9	3P-20	ACCU-1	H	3.98	3#12, #12G, 3/4"C		11.98			8.00	O			10
11			H	3.98				11.98		8.00	O			12
13			H	3.98		4.37			3#12, #12G, 3/4"C	0.39	M	OAF-1	3P-15	14
15	20	SPARE					0.39			0.39	M			16
17	20	SPARE						0.39		0.39	M			18
TOTAL CONNECTED LOAD (KVA)						30.24	26.90	27.59						

LOAD CLASSIFICATION		CONNECTED LOAD (KVA)	DEMAND FACTOR	DEMAND LOAD (KVA)	PANEL TOTAL LOAD		
TOTAL LIGHTING	L	1.32	125%	1.65			
TOTAL RECEPTACLE	R	0.00	100%	0.00	TOTAL CONNECTED LOAD	84.73	KVA
TOTAL HVAC	H	11.95	100%	11.95	TOTAL DEMAND LOAD	73.22	KVA
TOTAL MOTOR	M	1.16	100%	1.16	TOTAL CONNECTED CURRENT	102.04	AMP
TOTAL KITCHEN/EQUIPMENTS	E	0.00	100%	0.00	TOTAL DEMAND CURRENT	88.18	AMP
TOTAL OTHER/MISCILLANEOUS	O	24.00	100%	24.00	SYSTEM VOLTAGE	277/480V	

PANEL: B (NEW)					MOUNTING: SURFACE
120/208V	VOLTS,	3 PHASE,	4 WIRE		LOCATION DISHWASH
MAIN CB 125A		MLO: NA	BUS: 225A		FED FROM TRANSFORMER "T"

CKT NO.	TRIP AMPS	DESCRIPTION OF LOAD	LOAD TYPE	LOAD (KVA)	MINIMUM BRANCH CIRCUIT	PER PHASE (KVA) A	B	C	MINIMUM BRANCH CIRCUIT	LOAD (KVA)	LOAD TYPE	DESCRIPTION OF LOAD	TRIP AMPS	CKT NO.
1	2P-15	AC-1	H	0.25	2#12, #12G, 3/4"C	1.56			2#12, #12G, 3/4"C	1.31	E	(1) REFRIGERATED SELF-SERVICE CASE	20*	2
3			H	0.25			0.81		2#12, #12G, 3/4"C	0.56	E	(3) COFFEE GRINDER	20	4
5	2P-15	AC-2	H	0.25	2#12, #12G, 3/4"C			0.81	2#12, #12G, 3/4"C	0.56	E	(3) COFFEE GRINDER	20	6
7			H	0.25		1.85			2#12, #12G, 3/4"C	1.60	E	(6) ESPRESSO SYSTEM	2P-20*	8
9	20	TIME CLOCK	L	0.50	2#12, #12G, 3/4"C		2.10			1.60	E			10
11	20	EXTERIOR SIGNAGE	L	1.20	2#12, #12G, 3/4"C			2.80	2#12, #12G, 3/4"C	1.60	E	(6) ESPRESSO SYSTEM	2P-20*	12
13	20	SHOW WINDOW RECEPTACLE	L	1.20	2#12, #12G, 3/4"C	2.80				1.60	E			14
15	20	MOTORIZED DAMPERS	M	0.30	2#12, #12G, 3/4"C		1.90		2#12, #12G, 3/4"C	1.60	E	(8) ELECTRIC CHIMNEY CAKE OVEN	2P-20*	16
17	2P-15	AC-3	H	0.25	2#12, #12G, 3/4"C			1.85		1.60	E			18
19			H	0.25		2.05			2#12, #12G, 3/4"C	1.80	E	(10) STEAM SYSTEM	2P-20*	20
21	20	RECIRCULATING PUMP (RCP-1)	M	0.20	2#12, #12G, 3/4"C		2.00			1.80	E			22
23	20	(13) HOT WATER TAP	E	1.40	2#12, #12G, 3/4"C			3.20	2#12, #12G, 3/4"C	1.80	E	(10) STEAM SYSTEM	2P-20*	24
25	20	(13) HOT WATER TAP	E	1.40	2#12, #12G, 3/4"C	3.20				1.80	E			26
27	20*	(14) UNDERCOUNTER REFRIGERATOR	E	0.35	2#12, #12G, 3/4"C		2.01		2#12, #12G, 3/4"C	1.66	E	(11) POUR OVER COFFEE	2P-20*	28
29	20*	(14) UNDERCOUNTER REFRIGERATOR	E	0.35	2#12, #12G, 3/4"C			2.01		1.66	E			30
31	20	(16) BLENDER, BEVERAGE	E	1.80	2#12, #12G, 3/4"C	2.36			2#12, #12G, 3/4"C	0.56	E	(12) GRINDER	20	32
33	20*	(17) UC ICE MACHINE	E	0.67	2#12, #12G, 3/4"C		1.22		2#12, #12G, 3/4"C	0.56	E	(12) GRINDER	20	34
35	20	(19) MIXER, COUNTER	E	1.61	2#12, #12G, 3/4"C			2.17	2#12, #12G, 3/4"C	0.56	E	(12) GRINDER	20	36
37	2P-20*	(23) CONVECTION OVEN	E	1.35	2#12, #12G, 3/4"C	1.97			2#12, #12G, 3/4"C	0.62	E	(34) REACH-IN REFRIGERATOR	20*	38
39			E	1.35			2.87		2#12, #12G, 3/4"C	1.52	E	(42) WAREWASHER	20*	40
41	20	(KIOSK) RECEPTACLE	R	0.36	2#12, #12G, 3/4"C			1.26	2#12, #12G, 3/4"C	0.90	R	(GU1) CUSTOMER AREA CONVENIENCE RECEPTACLE	20	42
43	20	(POS) & (PRNT) RECEPTACLE	R	0.36	2#12, #12G, 3/4"C	0.90			2#12, #12G, 3/4"C	0.54	R	(GU1) CAFÉ SERVICE AREA CONVENIENCE RECEPTACLE	20	44
45	20	(GU1) & (GU2)STORAGE & PREP AREA CONV. RCPT	R	0.72	2#12, #12G, 3/4"C		0.90		2#12, #12G, 3/4"C	0.18	R	(GU1) DISHWASH AREA CONVENIENCE RECEPTACLE	20	46
47	20	LED STRIP LIGHT	L	0.50	2#12, #12G, 3/4"C			0.68	2#12, #12G, 3/4"C	0.18	R	MECH MAINTENANCE RECEPTACLE	20	48
49	20	LED STRIP LIGHT	L	0.50	2#12, #12G, 3/4"C	0.77			2#12, #12G, 3/4"C	0.27	M	EF-1	2P-15	50
51	20	SPARE					0.27			0.27	M			52
53	20	SPARE						0.00				SPARE	20	54
TOTAL CONNECTED LOAD (KVA)						17.45	14.08	14.77						

LOAD CLASSIFICATION		CONNECTED LOAD (KVA)	DEMAND FACTOR	DEMAND LOAD (KVA)	PANEL TOTAL LOAD		
TOTAL LIGHTING	L	3.90	125%	4.88			
TOTAL RECEPTACLE	R	3.24	100%	3.24	TOTAL CONNECTED LOAD	46.30	KVA
TOTAL HVAC	H	1.50	100%	1.50	TOTAL DEMAND LOAD	34.46	KVA
TOTAL MOTOR	M	1.04	100%	1.04	TOTAL CONNECTED CURRENT	128.67	AMP
TOTAL KITCHEN/EQUIPMENTS	E	36.61	65%	23.80	TOTAL DEMAND CURRENT	95.76	AMP
TOTAL OTHER/MISCILLANEOUS	O	0.00	100%	0.00	SYSTEM VOLTAGE	120/208 Wye	

PANEL SCHEDULE GENERAL NOTES:

1. E.C. SHALL COORDINATE EXACT POWER AND ELECTRICAL OUTLET/DISCONNECT REQUIREMENT FOR MECHANICAL/PLUMBING EQUIPMENT WITH EQUIPMENT MANUFACTURER IN COORDINATION WITH ARCHITECT/OWNER IN THE FIELD PRIOR TO ROUGH-IN. BASE BID ACCORDINGLY.
2. E.C. SHALL COORDINATE WITH ALL KITCHEN AND OTHER EQUIPMENT MANUFACTURER / SUPPLIER FOR THE EXACT ELECTRICAL REQUIREMENTS AND PROVIDE THE ELECTRICAL OUTLET INCLUDING J-BOX/RECEPTACLE/ DISCONNECT, BREAKER, CABLE AND CONDUIT ACCORDINGLY. BASE BID ACCORDINGLY.
3. CONTRACTOR SHALL COORDINATE WITH ARCHITECT/OWNER/LV CONSULTANT FOR POWER AND ELECTRICAL REQUIREMENTS FOR THE LOW VOLTAGE AND SECURITY SYSTEM IN FIELD AND ACCORDINGLY PROVIDE THE ELECTRICAL CONNECTIONS/CIRCUITS FROM SPARE CIRCUITS FOR LOW VOLTAGE SYSTEM PER REQUIREMENTS. BASE BID ACCORDINGLY.

ELECTRICAL PANEL SCHEDULE ABBREVIATIONS:

(E)	EXISTING
(N)	NEW
MLO	MAIN LUG ONLY
L	LIGHTING
R	RECEPTACLE
H	HVAC
M	MOTOR
E	EQUIPMENT
O	OTHER
*	GFCI BREAKER

1 E4.0 ELECTRICAL PANEL SCHEDULES
SCALE: N.T.S.

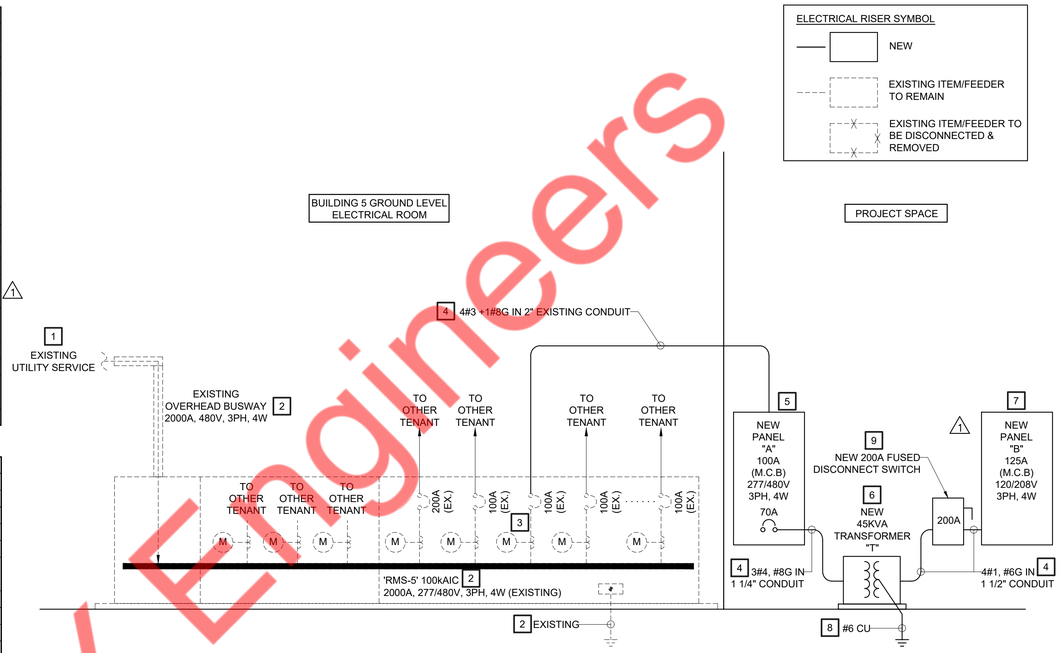

RISER DIAGRAM KEYED NOTES: #

1. EXISTING 2000A, 277/480V, 3-PHASE, 4-WIRE ELECTRICAL SERVICE INCOMING IN EXISTING RMS-5 SHALL REMAIN AS IS. E.C. SHALL COORDINATE WITH LANDLORD/UTILITY COMPANY FOR EXACT POWER DISTRIBUTION. INFORM THE ENGINEER ON RECORD FOR ANY DISCREPANCIES PRIOR TO COMMENCING ANY WORK.
2. EXISTING OVERHEAD BUS, RMS-5 & GROUNDING FOR THE OVERALL SPACE SHALL REMAIN AS IT IS. E.C. SHALL COORDINATE WITH LANDLORD/ARCHITECT FOR EXACT POWER DISTRIBUTION. INFORM THE ENGINEER ON RECORD FOR ANY DISCREPANCIES PRIOR TO COMMENCING ANY WORK.
3. EXISTING UTILITY METER & 100A, 277/480V, 3-PHASE, 4-WIRE DISCONNECT/BREAKER IN EXISTING RMS-5 FOR THE PROJECT SPACE SHALL REMAIN AS IT IS. E.C. SHALL EXACT VERIFY OPERABLE CONDITION AND EXACT LOCATION OF EXISTING METER & DISCONNECT/BREAKER IN FIELD IN COORDINATION WITH LANDLORD/ARCHITECT, REPLACE WITH NEW IF FOUND INOPERABLE. BASE BID ACCORDINGLY.
4. E.C. TO FIELD VERIFY EXACT LENGTH OF THE CABLE AND CHECK THE VOLTAGE DROP IS UNDER LIMIT PER NEC BEFORE INSTALLATION. E.C. SHALL PROVIDE THE UPDATED WIRE/FEEDER SIZE AS NEEDED AS PER THE VOLTAGE DROP CALCULATION. BASE BID ACCORDINGLY.
5. NEW 100A(M.C.B), 277/480V, 3-PHASE, 4-WIRE ELECTRICAL PANEL "A" FOR PROJECT SPACE. E.C. TO COORDINATE WITH ARCHITECT/OWNER FOR FINAL LOCATION OF ELECTRICAL PANEL "A" IN FIELD.
6. NEW 45KVA, 3-PHASE FLOOR MOUNTED TRANSFORMER "T" WITH 277/480V AS PRIMARY AND 120/208V SECONDARY FOR PROJECT SPACE. E.C. TO COORDINATE WITH ARCHITECT/OWNER FOR FINAL LOCATION OF TRANSFORMER "T" IN FIELD. E.C. SHALL PROCURE ALL THE NECESSARY ACCESSORIES NEEDED FOR THE MOUNTING OF TRANSFORMER. E.C. SHALL ENSURE THE PLACEMENT/MOUNTING OF TRANSFORMER SHALL COMPLY WITH THE CODE. BASE BID ACCORDINGLY.
7. NEW 125A(M.C.B), 120/208V, 3-PHASE, 4-WIRE ELECTRICAL PANEL "B" FOR PROJECT SPACE. E.C. TO COORDINATE WITH ARCHITECT/OWNER FOR FINAL LOCATION OF ELECTRICAL PANEL "B" IN FIELD.
8. E.C. SHALL PROVIDED GROUNDING COMPLYING CEC 250.66.
9. NEW 200A, 120/208V, 3-PHASE, 4-WIRE ELECTRICAL DISCONNECT SWITCH FUSED AT 125A FOR PROJECT SPACE. E.C. TO COORDINATE WITH ARCHITECT/OWNER FOR FINAL LOCATION OF ELECTRICAL FUSED DISCONNECT SWITCH IN FIELD.

RISER DIAGRAM GENERAL NOTES:

1. ABOVE RISER DIAGRAM IS FOR REFERENCE PURPOSE ONLY. E.C TO VERIFY EXACT POWER DISTRIBUTION & OPERABLE CONDITION OF EXISTING DEVICES/EQUIPMENTS IN FIELD AND INFORM ENGINEER FOR ANY DISCREPANCY. VERIFY SCOPE OF WORK WITH OWNER/LANDLORD PRIOR TO BID.
2. E.C. SHALL VERIFY THE INCOMING SERVICE AMPERAGE, VOLTAGE, NUMBER OF PHASES, WIRE SIZE AND DISTRIBUTION IN FIELD.
3. E.C. TO COORDINATE FAULT CURRENT (ISC) RATING WITH UTILITY COMPANY AND AHJ PRIOR TO COMMENCING ANY WORK.

2 E4.0 ELECTRICAL RISER DIAGRAM
SCALE: N.T.S.

Property of NY Engineers

DESIGN PROFESSIONAL
NY ENGINEERS
382 NE 191st Street Suite 49674
MIAMI, FL 33179
(786)-788-0295
ny-engineers.com

DATES

HEALTH COMMENTS #2	2025.09.01
LL COMMENTS #1	2025.08.20

PROJECT

TITLE

ELECTRICAL RISER DIAGRAM AND PANEL SCHEDULES

SHEET NO.

E4.0

STATE OF CALIFORNIA
Indoor Lighting
CALIFORNIA ENERGY COMMISSION

CERTIFICATE OF COMPLIANCE — **NRCC-LTI-E**

This document is used to demonstrate compliance with requirements in 110.9, 110.12(c), 130.0, 130.1, 140.6 and 141.0(b)2 for indoor lighting scopes using the prescriptive path for nonresidential and hotel/motel occupancies. It is also used to document compliance with requirements in 160.5, 170.2(e) and 180.2(b)4 for indoor lighting scopes using the prescriptive path for multifamily occupancies. Multifamily includes dormitory and senior living facilities.

Project Name:	Kona Island Coffee	**Report Page:**	**(Page 1 of 8)**
Project Address:	2565 California St. # 84 Mountain View Ca. 94040	**Date Prepared:**	2025-07-23T06:23:51-04:00

A. GENERAL INFORMATION

01	Project Location (city)	Mountain View, CA	04 Total Conditioned Floor Area (ft^2)	1,520
02	Climate Zone	4	05 Total Unconditioned Floor Area (ft^2)	0
03	Occupancy Types Within Project (select all that apply):		06 # of Stories (Habitable Above Grade)	8

● Restaurant

B. PROJECT SCOPE

This table includes any lighting systems that are within the scope of the permit application and are demonstrating compliance using the prescriptive path outlined in 140.6 / 170.2(e) or 141.0(b)2 / 180.2(b)4 for alterations.

Scope of Work	Conditioned Spaces		Unconditioned Spaces	
01	02	03	04	05
My Project Consists of (check all that apply):	Calculation Method	Area (ft^2)	Calculation Method	Area (ft^2)
☒ New Lighting System	Complete Building Method	1520	N/A	0
☐ New Lighting System - Parking Garage	N/A	0	N/A	0
Total Area of Work (ft^2)	1520			

STATE OF CALIFORNIA
Indoor Lighting
CALIFORNIA ENERGY COMMISSION

CERTIFICATE OF COMPLIANCE — **NRCC-LTI-E**

Project Name:	Kona Island Coffee	**Report Page:**	**(Page 2 of 8)**
		Date Prepared:	2025-07-23T06:23:51-04:00

C. COMPLIANCE RESULTS

If any cell on this table says "DOES NOT COMPLY" or "COMPLIES with Exceptional Conditions" refer to Table D. for guidance.

Lighting in conditioned and unconditioned spaces must not be combined for compliance per 140.6(b)1 / 170.2(e)	Allowed Lighting Power per 140.6(b) / 170.2(e) (Watts)						Adjusted Lighting Power per 140.6(a) / 170.2(e) (Watts)				Compliance Results
	01	02	03	04		05	06	07		08	09
	Complete Building 140.6(c)1	Area Category 140.6(c)2 / 170.2(e)4	Area Category Additional 140.6(c)2G / 170.2(e)4Av (+)	Tailored 140.6(c)3 / 170.2(e)4B (+)	=	**Total Allowed** (Watts)	≥ Total Designed (Watts)	Adjustments PAF Lighting Control Credits 140.6(a)2 / 170.2(e)1B (-)	=	**Total Adjusted** (Watts) *Includes Adjustments	**05 must be >= 08 140.6 / 170.2(e)**
	(See Table I)	(See Table I)	(See Table J)	(See Table K)			(See Table F)	(See Table P)			
Conditioned	988				=	988	≥ 952		=	952	COMPLIES
Unconditioned					=		≥		=		
Controls Compliance (See Table H for Details)											COMPLIES
Rated Power Reduction Compliance (See Table Q for Details)											

D. EXCEPTIONAL CONDITIONS

This table is auto-filled with uneditable comments because of selections made or data entered in tables throughout the form.

E. ADDITIONAL REMARKS

This table includes remarks made by the permit applicant to the Authority Having Jurisdiction.

STATE OF CALIFORNIA
Indoor Lighting
CALIFORNIA ENERGY COMMISSION

CERTIFICATE OF COMPLIANCE — **NRCC-LTI-E**

Project Name:	Kona Island Coffee	**Report Page:**	**(Page 3 of 8)**
		Date Prepared:	2025-07-23T06:23:51-04:00

F. INDOOR LIGHTING FIXTURE SCHEDULE

This table includes all planned permanent and portable lighting other than dwelling unit/ hotel/ motel room lighting. Multifamily dwelling unit and hotel/motel room lighting is documented in Table T. If using Table T to document lighting in multifamily common use areas providing shared provisions for living, eating, cooking or sanitation, those luminaires are not included here.

Designed Wattage: Conditioned Spaces

01	02	03	04	05	06	07	08	09	10	
Name or Item Tag	Complete Luminaire Description	Modular (Track) Fixture	Small Aperture & Color Change[1]	Watts per luminaire[2]	How is Wattage determined	Total Number of Luminaires	Excluded per 140.6(a)3 / 170.2(e)2C	Design Watts	Field Inspector	
									Pass	Fail
F1	8" DIA. LOW BAY LIGHT FIXTURE	No	NA	100	Mfr. Spec	4	No	400	☐	☐
F2	4" RECESSED LED LIGHT FIXTURE	No	NA	18	Mfr. Spec	10	No	180	☐	☐
F3	6" DIA. LED PENDANT	No	NA	20	Mfr. Spec	6	Exempt	---	☐	☐
F4	24" X 24" FLAT PANEL	No	NA	37	Mfr. Spec	6	No	222	☐	☐
F5	20" DIA. LED PENDANT	No	NA	30	Mfr. Spec	5	No	150	☐	☐
Total Designed Watts: CONDITIONED SPACES								952		

[1]*FOOTNOTE: Design Watts for small aperture and color changing luminaires which qualify per 140.6(a)4B / 170.2(e)2D is adjusted to be 75% /80% of their rated wattage. Table F automatically makes this adjustment, the permit applicant should enter full rated wattage in column 05.*

[2]*Authority Having Jurisdiction may ask for Luminaire cut sheets to confirm wattage used for compliance per 130.0(c) / 160.5(b). Wattage used must be the maximum rated for the luminaire, not the lamp.*

G. MODULAR LIGHTING SYSTEMS

This section does not apply to this project.

STATE OF CALIFORNIA
Indoor Lighting
CALIFORNIA ENERGY COMMISSION

CERTIFICATE OF COMPLIANCE — **NRCC-LTI-E**

Project Name:	Kona Island Coffee	**Report Page:**	**(Page 4 of 8)**
		Date Prepared:	2025-07-23T06:23:51-04:00

H. INDOOR LIGHTING CONTROLS (Not including PAFs)

This table includes lighting controls for conditioned and unconditioned spaces.

Building Level Controls

01	02	03	
Mandatory Demand Response 110.12(c)	Shut-off controls 130.1(c) / 160.5(b)4C	Field Inspector	
		Pass	Fail
NA < 4,000W subject to multilevel	See Area/Space Level Controls	☐	☐

Area Level Controls

04	05	06	07	08	09	10	11	12	
Area Description	Complete Building or Area Category Primary Function Area	Manual Area Controls 130.1(a) / 160.5(b)4A	Multi-Level Controls 130.1(b) / 160.5(b)4B	Shut-Off Controls 130.1(c) // 160.5(b)4C	Primary/Sky lit Daylighting 130.1(d) / 160.5(b)4D	Secondary Daylighting 130.1(d) / 160.5(b)4D	Interlocked Systems 140.6(a)1/ 170.2(e)2A	Field Inspector	
								Pass	Fail
CUSTOMER AREA	Restaurant	Auth. Personnel	Dimmer	Auto. Time Switch	NA: Not daylit zone	NA: Not daylit zone	Yes	☐	☐
CAFE SERVICE	Restaurant	Auth. Personnel	Dimmer	Auto. Time Switch	NA: Not daylit zone	NA: Not daylit zone	Yes	☐	☐
PREP, DISHWASH, STORAGE	Restaurant	Auth. Personnel	Multilevel Switch	Occupancy Sensor	NA: Not daylit zone	NA: Not daylit zone	Yes	☐	☐
					13				
					Plan Sheet Showing Daylit Zones:				

I. LIGHTING POWER ALLOWANCE: COMPLETE BUILDING OR AREA CATEGORY METHODS

Each area complying using the Complete Building or Area Category Methods per 140.6(b) are included in this table. Column 06 indicates if additional lighting power allowances per 140.6(c) or adjustments per 140.6(a) are being used .

Conditioned Spaces

01	02	03	04	05	06

STATE OF CALIFORNIA
Indoor Lighting
CALIFORNIA ENERGY COMMISSION

CERTIFICATE OF COMPLIANCE — **NRCC-LTI-E**

Project Name:	Kona Island Coffee	**Report Page:**	**(Page 5 of 8)**
		Date Prepared:	2025-07-23T06:23:51-04:00

I. LIGHTING POWER ALLOWANCE: COMPLETE BUILDING OR AREA CATEGORY METHODS

Area Description	Complete Building or Area Category Primary Function Area	Allowed Density (W/ft^2)	Area (ft^2)	Allowed Wattage (Watts)	Additional Allowance / Adjustment	
					Area Category	PAF
CUSTOMER AREA	Restaurant	0.65	610	396.5	No	No
CAFE SERVICE	Restaurant	0.65	420	273	No	No
PREP, DISHWASH, STORAGE	Restaurant	0.65	490	318.5	No	No
		TOTALS:	1,520	988	See Tables J, or P for detail	

J. ADDITIONAL ALLOWANCE: AREA CATEGORY METHOD QUALIFYING LIGHTING SYSTEM

This section does not apply to this project.

K. TAILORED METHOD GENERAL LIGHTING POWER ALLOWANCE

This section does not apply to this project.

L. ADDITIONAL LIGHTING ALLOWANCE: TAILORED WALL DISPLAY

This section does not apply to this project.

M. ADDITIONAL LIGHTING ALLOWANCE: TAILORED FLOOR AND TASK LIGHTING

This section does not apply to this project.

N. ADDITIONAL LIGHTING ALLOWANCE: TAILORED DECORATIVE /SPECIAL EFFECTS

This section does not apply to this project.

O. ADDITIONAL LIGHTING ALLOWANCE: TAILORED VERY VALUABLE MERCHANDISE

This section does not apply to this project.

STATE OF CALIFORNIA
Indoor Lighting
CALIFORNIA ENERGY COMMISSION

CERTIFICATE OF COMPLIANCE — **NRCC-LTI-E**

Project Name:	Kona Island Coffee	**Report Page:**	**(Page 6 of 8)**
		Date Prepared:	2025-07-23T06:23:51-04:00

P. POWER ADJUSTMENT: LIGHTING CONTROL CREDIT (POWER ADJUSTMENT FACTOR (PAF))

This section does not apply to this project.

Q. RATED POWER REDUCTION COMPLIANCE FOR ONE-FOR-ONE ALTERATIONS

This section does not apply to this project.

R. 80% LIGHTING POWER FOR ALL ALTERATIONS - CONTROLS EXCEPTIONS

This section does not apply to this project.

S. DAYLIGHT DESIGN POWER ADJUSTMENT FACTOR (PAF)

This section does not apply to this project.

T. DWELLING UNIT LIGHTING

This section does not apply to this project.

U. DECLARATION OF REQUIRED CERTIFICATES OF INSTALLATION

Selections have been made based on information provided in this document. If any selections have been changed by permit applicant, an explanation should be included in Table E. Additional Remarks. These documents must be provided to the building inspector during construction and can be found online

Form/Title
NRCI-LTI-E - Must be submitted for all buildings

STATE OF CALIFORNIA
Indoor Lighting
CALIFORNIA ENERGY COMMISSION

CERTIFICATE OF COMPLIANCE — **NRCC-LTI-E**

Project Name:	Kona Island Coffee	**Report Page:**	**(Page 7 of 8)**
		Date Prepared:	2025-07-23T06:23:51-04:00

V. DECLARATION OF REQUIRED CERTIFICATES OF ACCEPTANCE

Selections have been made based on information provided in this document. If any selections have been changed by the permit applicant, an explanation should be included in Table E. Additional Remarks. These documents must be provided to the building inspector during construction and any with "-A" in the form name must be completed through an Acceptance Test Technician Certification Provider (ATTCP). For more information visit: http://www.energy.ca.gov/title24/attcp/providers.html

Form/Title	Systems/Spaces To Be Field Verified
NRCA-LTI-02-A - Must be submitted for occupancy sensors and automatic time switch controls.	CUSTOMER AREA; CAFE SERVICE; PREP, DISHWASH, STORAGE
NRCA-LTI-04-A - Must be submitted for demand responsive lighting controls.	CUSTOMER AREA; CAFE SERVICE; PREP, DISHWASH, STORAGE

STATE OF CALIFORNIA
Indoor Lighting
CALIFORNIA ENERGY COMMISSION

CERTIFICATE OF COMPLIANCE — **NRCC-LTI-E**

Project Name:	Kona Island Coffee	**Report Page:**	**(Page 8 of 8)**
Project Address:	2565 California St. # 84 Mountain View Ca. 94040	**Date Prepared:**	2025-07-23T06:23:51-04:00

DOCUMENTATION AUTHOR'S DECLARATION STATEMENT

I certify that this Certificate of Compliance documentation is accurate and complete.

Documentation Author Name: MICHAEL TOBIAS	Documentation Author Signature:
Company: NY ENGINEERS	Signature Date: 07/23/2025
Address: 382 NE 191 ST, SUITE 49674	CEA/ HERS Certification Identification (if applicable):
City/State/Zip: MIAMI, FLORIDA 33179	Phone:

RESPONSIBLE PERSON'S DECLARATION STATEMENT

I certify the following under penalty of perjury, under the laws of the State of California:

1. The information provided on this Certificate of Compliance is true and correct.
2. I am eligible under Division 3 of the Business and Professions Code to accept responsibility for the building design or system design identified on this Certificate of Compliance (responsible designer)
3. The energy features and performance specifications, materials, components, and manufactured devices for the building design or system design identified on this Certificate of Compliance conform to the requirements of Title 24, Part 1 and Part 6 of the California Code of Regulations.
4. The building design features or system design features identified on this Certificate of Compliance are consistent with the information provided on other applicable compliance documents, worksheets, calculations, plans and specifications submitted to the enforcement agency for approval with this building permit application.
5. I will ensure that a completed signed copy of this Certificate of Compliance shall be made available with the building permit(s) issued for the building, and made available to the enforcement agency for all applicable inspections. I understand that a completed signed copy of this Certificate of Compliance is required to be included with the documentation the builder provides to the building owner at occupancy.

Responsible Designer Name: MICHAEL TOBIAS	Responsible Designer Signature:
Company: NY ENGINEERS	Date Signed: 07/23/2025
Address: 382 NE 191 ST, SUITE 49674	License: M33750
City/State/Zip: MIAMI, FLORIDA 33179	Phone:

Property of NY Engineers

DESIGN PROFESSIONAL
NY ENGINEERS
382 NE 191st Street Suite 49674
MIAMI, FL 33179
(786)-788-0295
ny-engineers.com

DATES

PROJECT

TITLE

TITLE 24

SHEET NO.

E5.0

PLUMBING SYMBOL LIST

SAN	SANITARY SEWER (ABOVE FLOOR)
SAN	SANITARY SEWER (UNDERGROUND)
EX.SAN	EXISTING SANITARY SEWER (UNDERGROUND)
GW	GREASE WASTE (UNDERGROUND)
FW	FILTER WATER PIPING
V	VENT PIPING
CW	COLD WATER PIPING
HW	HOT WATER PIPING
EX.CW	EXISTING COLD WATER PIPING
	P-TRAP
	PIPE UP
	PIPE DROP
	CLEANOUT
	PLUGGED OUTLET/CLEANOUT
	SHUT-OFF VALVE
	POINT OF CONNECTION
	ANGLE VALVE
	RECIRCULATION PUMP
	BALANCING VALVE
	GAS SHOT OFF VALVE
	EXPANSION TANK
	CHECK VALVE

PLUMBING ABBREVATIONS

CO	CLEANOUT
CW	COLD WATER
HW	HOT WATER
HWR	HOT WATER RETURN
SAN	SANITARY
V	VENT
LAV	LAVATORY
WC	WATER CLOSET
MS	MOP SINK
TYP.	TYPICAL
DN	DOWN
FD	FLOOR DRAIN
N.I.C.	NOT IN SCOPE
GW	GREASE WASTE
ET	EXPANSION TANK
RCP	RECIRCULATING PUMP

PLUMBING DRAWING LIST

P0.1 PLUMBING NOTES, SYMBOLS, ABBREVIATIONS & SPECIFICATIONS

P0.2 PLUMBING SPECIFICATIONS

P1.0 PLUMBING WATER FLOOR PLAN

P1.1 PLUMBING SANITARY FLOOR PLAN

P2.0 PLUMBING DETAILS

P3.0 PLUMBING SCHEDULE & RISER DIAGRAMS

P4.0 TITLE 24

BUILDING DEPARTMENT PLUMBING NOTES

1. ALL PLUMBING SYSTEMS (SANITARY WASTE, VENT, WATER) AND ASSOCIATED EQUIPMENT SHALL BE INSTALLED, OPERATED AND MAINTAINED IN ACCORDANCE WITH THE REQUIREMENTS OF 2022 CALIFORNIA PLUMBING CODE.

2. INSTALLATION OF UNDERGROUND PIPING SHALL BE IN ACCORDANCE WITH THE REQUIREMENTS OF 2022 CALIFORNIA PLUMBING CODE SECTION 704.

3. PROTECTION OF PIPING AND PLUMBING SYSTEM COMPONENTS AS PER 2022 CALIFORNIA PLUMBING CODE SECTION 312.0.

4. TRENCHING, EXCAVATION AND BACKFILL AS PER 2022 CALIFORNIA PLUMBING CODE SECTION 314.

5. RODENT PROOFING AS PER 2022 CALIFORNIA PLUMBING CODE 312.12.

6. MATERIALS USED IN PLUMBING SYSTEMS SHALL BE IN ACCORDANCE WITH THE REQUIREMENTS OF 2022 CALIFORNIA PLUMBING CODE SECTION PC 301.3, 313.2, 604, 605.16, 701.2, 803.1 AND 903.0.

7. DEEP SEAL TRAPS FOR FLOOR DRAINS SHALL BE PROVIDED AS PER 2022 CALIFORNIA PLUMBING CODE SECTION 1002, AND CLEAN-OUTS SHALL BE INSTALLED IN ACCORDANCE WITH THE REQUIREMENTS OF SECTION 707.

8. VERTICAL AND HORIZONTAL PIPING SHALL BE SUPPORTED IN ACCORDANCE WITH THE REQUIREMENTS OF 2022 CALIFORNIA PLUMBING CODE SECTION 313.

9. WATER SUPPLY SYSTEMS SHALL BE INSTALLED AND MAINTAINED IN ACCORDANCE WITH THE REQUIREMENTS OF 2022 CALIFORNIA PLUMBING CODE CHAPTER 6 SECTION 601-603, 604, 605, 606, 607, 608, 610.

10. THE SANITARY DRAINAGE SYSTEM SHALL BE SIZED AND INSTALLED IN ACCORDANCE WITH THE REQUIREMENTS OF 2022 CALIFORNIA PLUMBING CODE CHAPTER 7 SECTION 701, 704, 705, 706, 707, 708, 711.

11. VENT PIPING FOR THE SANITARY DRAINAGE SYSTEM SHALL BE INSTALLED IN ACCORDANCE WITH THE REQUIREMENTS OF 2022 CALIFORNIA PLUMBING CODE CHAPTER 9 SECTIONS 901-12.

12. INSPECTION AND TESTING OF PLUMBING SYSTEMS SHALL BE IN ACCORDANCE WITH 2022 CALIFORNIA PLUMBING CODE CHAPTER 1, DIVISION II, SECTION 105.2-3.

APPLICABLE CODES

A. 2022 CALIFORNIA BUILDING CODE

B. 2022 CALIFORNIA MECHANICAL CODE

C. 2022 CALIFORNIA PLUMBING CODE

D. 2022 CALIFORNIA FIRE CODE

E. 2022 CALIFORNIA ELECTRICAL CODE

F. 2022 CALIFORNIA ENERGY CODE.

PLUMBING SPECIFICATIONS

1. BASIC PLUMBING REQUIREMENTS, MATERIALS AND METHODS

1.01 SCOPE

A. PROVIDE ALL MATERIAL, TOOLS, SUPERVISION AND LABOR INCLUDING ALL MISCELLANEOUS AND INCIDENTAL ITEMS REQUIRED FOR COMPLETE AND OPERABLE PLUMBING INSTALLATIONS AS SHOWN OR DESCRIBED ON THE DRAWINGS AND IN THESE SPECIFICATIONS.

B. THE CONTRACTOR SHALL BE RESPONSIBLE FOR THE PROTECTION OF ALL EXISTING AND NEW CONDITIONS AND MATERIALS WITHIN THE CONSTRUCTION AREA. ANY DAMAGE CAUSED BY THE CONTRACTOR SHALL BE REPAIRED TO THE OWNER'S SATISFACTION.

C. OBTAIN ALL PERMITS, PAY ALL PERMIT FEES AND SCHEDULE ALL REQUIRED INSPECTIONS. COPIES OF ALL PERMITS AND INSPECTION CERTIFICATES SHALL BE FORWARDED TO THE OWNER FOR RECORD.

D. THE GENERAL CONDITIONS OF THE CONTRACT AND ALL DIVISION 1 REQUIREMENTS APPLY TO THE WORK OF THIS SECTION.

E. THE CONTRACTOR SHALL VISIT THE SITE PRIOR TO SUBMITTING BID TO DETERMINE CONDITIONS AND THE EXTENT OF THE WORK. BY COMMENCING WORK, THE CONTRACTOR ACKNOWLEDGES HIS CONFIRMATION OF ALL CONDITIONS AS ACCEPTABLE WITH REFERENCE TO HIS CONTRACT, SCOPE OF WORK AND BID PRICE SUCH THAT NO ADDITIONAL COMPENSATION SHALL BE FORTHCOMING FOR UNFORESEEN EXISTING CONDITIONS.

F. IN ALL AREAS SUBJECT TO FREEZING CONDITIONS, THE CONTRACTOR SHALL PROVIDE FREEZE PROTECTION FOR ALL DOMESTIC WATER PIPING INSTALLED UNDER HIS CONTRACT.

G. ALL ELECTRICAL REQUIREMENTS SHALL BE COORDINATED WITH THE CONTRACTOR FOR ELECTRICAL WORK. THIS CONTRACTOR IS RESPONSIBLE FOR ALL LOW VOLTAGE WIRING FOR EQUIPMENT INSTALLED UNDER HIS CONTRACT. THE CONTRACTOR FOR ELECTRICAL WORK IS RESPONSIBLE FOR LINE VOLTAGE POWER WIRING ONLY.

H. COLOR AND FINISH SELECTIONS FOR ALL MATERIALS, INCLUDING PAINTING OF PIPING, SHALL BE AS DIRECTED AND/OR APPROVED BY THE ARCHITECT.

I. MINOR DETAILS NOT SHOWN OR SPECIFIED, BUT NECESSARY FOR THE PROPER AND ACCEPTABLE CONSTRUCTION, INSTALLATION OR OPERATION OF ANY PART OF THE WORK AS DETERMINED BY THE ENGINEER SHALL BE INCLUDED AS IF SPECIFIED OR INDICATED ON THE DRAWINGS.

J. THIS CONTRACTOR SHALL BE RESPONSIBLE FOR COORDINATING ALL REQUIREMENTS FOR THE INSTALLATION, CONNECTION, EXTENSION OR MODIFICATION TO ALL UTILITY SERVICES WITH RESPECTIVE PROVIDERS INCLUDING PAYMENT OF ALL ASSOCIATED FEES.

K. THE CONTRACTOR IS RESPONSIBLE FOR ALL PAINTING ASSOCIATED WITH CUTTING AND PATCHING. ALL PAINTING IN AREAS WITH COMPLETE FINISH RENOVATIONS SHALL BE PROVIDED BY THE GENERAL CONTRACTOR.

1.02 SUBMITTALS

A. SUBMITTAL REQUIREMENTS SHALL BE COORDINATED WITH THE ARCHITECT AND AUTHORITIES HAVING JURISDICTION. UNLESS OTHERWISE DIRECTED, CONTRACTOR SHALL PROVIDE SUBMITTALS AS LISTED BELOW.

1. PIPE AND FITTINGS
2. VALVES
3. HANGERS AND SUPPORTS
4. PLUMBING PIPING LAYOUT
5. TESTS
6. PLUMBING FIXTURES
7. WATER HEATERS & ACCESSORIES
8. MIXING VALVES
9. ALL SCHEDULED PLUMBING EQUIPMENT

B. SUBMITTALS FROM SUPPLIERS OR MANUFACTURERS WHICH DO NOT BEAR THE STAMP OF THE SUBMITTING CONTRACTOR INDICATING THAT THE CONTRACTOR HAS REVIEWED THE SUBMITTAL FOR CONFORMANCE WITH THE PROJECT REQUIREMENTS WILL BE RETURNED REJECTED.

C. THE ENGINEER'S REVIEW OF SUBMITTALS IS A COURTESY WHICH DOES NOT RELIEVE THE CONTRACTOR FROM CONFORMING WITH THE CONSTRUCTION DOCUMENTS, REGARDLESS OF THE ACTION INDICATED BY THE SHOP DRAWINGS STAMP.

D. REVIEW OF SHOP DRAWINGS BY THE ENGINEER SHALL BE LIMITED TO THE INITIAL REVIEW, AND A SECOND REVIEW OF ANY REQUIRED RESUBMITTED DATA. IF THE ENGINEER IS REQUIRED TO REVIEW SHOP DRAWINGS FOR A THIRD (OR MORE) SUBMISSION OF THE SAME ITEM, THE CONTRACTOR SHALL BE LIABLE FOR COMPENSATING THE ENGINEER FOR THESE SUBSEQUENT REVIEWS AS PER THE ENGINEER'S CURRENT HOURLY RATE SCHEDULE.

E. SUBMIT PROOF OF APPROVAL AND/OR CONFIRMATION OF SATISFACTORY TEST RESULTS TO THE OWNER AND THE ARCHITECT.

F. SUBMIT TO THE OWNER'S MAINTENANCE PERSONNEL OPERATION AND MAINTENANCE DATA FOR ALL SYSTEM COMPONENTS, SERVICING REQUIREMENTS, INSPECTION DATA, REPLACEMENT PART NUMBERS AND AVAILABILITY AND CONTACT INFORMATION FOR SERVICE/SUPPLY COMPANY.

G. FOR ALL BELOW GRADE PIPING WHERE ACTUAL INSTALLATION DEVIATES FROM CONSTRUCTION DRAWINGS, THE CONTRACTOR SHALL PROVIDE AS-BUILT DRAWINGS INDICATING BELOW GRADE PIPE LOCATIONS DIMENSIONED TO NEAREST COLUMN LINES.

H. RECORD AS-BUILT DRAWINGS SHALL BE SUPPLIED TO THE OWNER/TENANT AFTER COMPLETION OF THE WORK SHOWING ANY ALTERATIONS, ADDITIONS AND/OR DELETIONS TO THE SYSTEM(S) INSTALLED.

1.03 SUBSTITUTIONS

A. ALL EQUIPMENT SHALL BE PRODUCTS OF THE SPECIFIED MANUFACTURER OR MANUFACTURERS. ALL BIDS SHALL BE BASED ON THE SPECIFIED MANUFACTURER OR MANUFACTURER'S EQUIPMENT. FOR SUBSTITUTIONS OF OTHER MANUFACTURER'S EQUIPMENT TO BE CONSIDERED, THE SUBSTITUTION MUST BE INDICATED PRIOR TO BIDDING WITH THE REASON FOR THE PROPOSED SUBSTITUTION IDENTIFIED, AND THE PROPOSED CREDIT TO THE OWNER INDICATED. THE ENGINEER SHALL DETERMINE THE ACCEPTABILITY OF ANY PROPOSED SUBSTITUTIONS.

B. THE CONTRACTOR ASSUMES ALL RESPONSIBILITY FOR COORDINATING THE WORK OF OTHER TRADES WHICH MAY BE AFFECTED BY SUBSTITUTIONS, INCLUDING ALL RELATED COSTS.

1.04 DEFINITIONS

A. FURNISH: TO PURCHASE, PROCURE, ACQUIRE AND DELIVER, COMPLETE WITH RELATED ACCESSORIES.

B. INSTALL: TO ERECT, MOUNT AND CONNECT, COMPLETE WITH RELATED ACCESSORIES.

C. PROVIDE: TO FURNISH AND INSTALL.

D. PLUMBING CONTRACTOR, THE CONTRACTOR, THIS CONTRACTOR: THE CONTRACTOR FOR PLUMBING WORK WHICH IS SPECIFIED HEREIN AND SHOWN ON THESE DRAWINGS.

1.05 DRAWINGS

A. THE DRAWINGS ARE DIAGRAMMATIC AND ARE INTENDED TO ILLUSTRATE THE GENERAL ARRANGEMENT AND ROUTING OF PIPING AND GENERAL LOCATIONS OF EQUIPMENT. PRECISE LOCATIONS OF EQUIPMENT, RISERS AND STACKS, AND ROUTING AND ELEVATION OF ALL PIPING SYSTEMS SHALL BE COORDINATED IN THE FIELD WITH THE ARCHITECT, ARCHITECTURAL DRAWINGS, THE WORK OF OTHER TRADES, EXISTING AND NEW BUILDING CONDITIONS AND/OR THE PREFERENCES OF THE OWNER/TENANT AS CONSTRUCTION PROCEEDS. ALL PIPING SHALL BE INSTALLED CONCEALED IN FINISHED SPACES, UNLESS NOTED OTHERWISE.

B. PROVIDE ALL NECESSARY INCIDENTAL MATERIALS AND ACCESSORIES REQUIRED TO MAKE THE WORK COMPLETE IN ALL RESPECTS, EVEN IF NOT PARTICULARLY SHOWN OR SPECIFIED.

C. REFER TO PLUMBING EQUIPMENT/FIXTURE SCHEDULE ON THE DRAWINGS FOR ALL FIXTURE AND EQUIPMENT SPECIFICATIONS.

D. REFER TO FIXTURE CONNECTION SIZE SCHEDULE FOR ALL FIXTURE ROUGHING SIZE REQUIREMENTS.

E. VERIFY ALL INDICATED CONDITIONS BEFORE STARTING WORK AND REPORT ANY DISCREPANCIES. THE DRAWINGS REFLECT CONDITIONS WHICH CAN BE REASONABLY INTERPRETED FROM THE EXISTING VISIBLE CONDITIONS OR FROM DRAWINGS AND INFORMATION FURNISHED BY THE OWNER.

F. LOCATE ALL FIXTURES AND EQUIPMENT AS PER THE FINAL ARCHITECTURAL DRAWINGS.

1.06 PRODUCTS

A. SANITARY AND VENT PIPING:

1. ABOVE GRADE PIPING SHALL BE HUB AND SPIGOT CAST IRON PIPE AS PER ASTM A74 WITH STAINLESS STEEL COUPLINGS AND ELASTOMERIC GASKETS WITH A MINIMUM 4 BANDS PER COUPLING.

2. SLOPE OF DRAINAGE SYSTEM SHALL BE 1/8" PER FOOT OF RUN FOR PIPE OVER 3" (I.D.) AND 1/4" PER FOOT OF RUN FOR PIPE 3" AND SMALLER (I.D.). VENT PIPING SHALL BE PITCHED TO DRAIN.

3. ALL CAST IRON SOIL PIPE AND FITTINGS SHALL BE MARKED WITH THE COLLECTIVE TRADEMARK OF THE CAST IRON SOIL PIPE INSTITUTE (CISPI) AND BE LISTED BY NSF INTERNATIONAL.

B. DOMESTIC WATER PIPING:

1. ABOVE GRADE WATER PIPING SHALL BE TYPE 'L' HARD-DRAWN COPPER TUBE.

2. FITTINGS IN DOMESTIC WATER PIPING SHALL BE COPPER OR COPPER ALLOY

3. JOINTS SHALL BE MADE WITH LEAD-FREE SOLDER.

4. THE ENTIRE DOMESTIC WATER DISTRIBUTION SYSTEM SHALL BE INSULATED INCLUDING ALL VALVES, FITTINGS, ETC.

5. COMPLY WITH NSF 61 FOR MATERIALS FOR WATER-SERVICE PIPING AND SPECIALTIES FOR DOMESTIC WATER.

6. INSULATION REQUIREMENT SHOULD COMPLY WITH CALIFORNIA STATE ENERGY CODE 2022. REFER BELOW TABLE FOR MINIMUM PIPE INSULATION THICKNESS ACC. TO CALIFORNIA PLUMBING CODE 2022 TABLE 120.3-A.

MINIMUM PIPE INSULATION THICKNESS

FLUID OPERATING TEMPERATURE RANGE AND USAGE (°F)	INSULATION CONDUCTIVITY		NOMINAL PIPE OR TUBE SIZE (INCHES)				
	CONDUCTIVITY BTU.IN./ (H.FT2.°F)	MEAN RATING TEMPERATURE, °F	<1	1 to < 1½	1½ to < 4	4 to < 8	≥8
141-200	0.25-0.29	125	1.5	1.5	2	2	2
105-140	0.21-0.28	100	1.0	1.0	1.5	1.5	1.5
40-60	0.21-0.27	75	0.5	0.5	1.0	1.0	1.0

7. AS PER 2022 CALIFORNIA ENERGY CODE 110.3(C)4A, AIR RELEASE VALVE OR VERTICAL PUMP SHALL BE INSTALLED ON RECIRCULATION LOOP PIPING ON THE INLET SIDE OF RECIRCULATION PUMP.

8. AS PER 2022 CALIFORNIA ENERGY CODE 110.3(C)4B, CHECK VALVE OR SIMILAR DEVICE SHALL BE LOCATED BETWEEN THE RECIRCULATION PUMP AND THE WATER HEATING EQUIPMENT TO PREVENT WATER FROM FLOWING BACKWARDS THROUGH THE RECIRCULATION PUMP.

9. AS PER 2022 CALIFORNIA ENERGY CODE 110.3(C)4D, ISOLATION VALVES SHALL BE INSTALLED ON BOTH SIDES OF THE PUMP.

10. AS PER 2022 CALIFORNIA ENERGY CODE 110.3(C)4E, COLD WATER AND RECIRCULATION LOOP PIPING SHALL NOT BE CONNECTED TO THE HOT WATER STORAGE TANK DRAIN PORT.

11. AS PER 2022 CALIFORNIA ENERGY CODE 110.3(C)4F, CHECK VALVE INSTALLED ON COLD WATER SUPPLY BETWEEN HOT WATER SYSTEM AND NEXT CLOSETS TEE ON COLD WATER SUPPLY.

C. HANGERS AND SUPPORTS:

1. HANGERS SHALL BE STANDARD STEEL, MALLEABLE OR WROUGHT IRON, AS MANUFACTURED BY GRINNELL OR APPROVED EQUAL, SUITABLE FOR THE TYPE OF CONSTRUCTION. PIPING SHALL NOT BE HUNG FROM OTHER PIPE.

2. SECTIONS OF INDIVIDUAL PIPE RUNS SHALL BE SUPPORTED BY CLEVIS HANGERS.

3. ALL EQUIPMENT SHALL BE PROVIDED WITH APPROVED SUPPORTS.

4. PROVIDE SEISMIC RESTRAINTS IN ACCORDANCE WITH ALL APPLICABLE FEDERAL, STATE AND LOCAL CODES AND STANDARDS AND THE REQUIREMENTS OF AUTHORITIES HAVING JURISDICTION.

5. SUPPORTS SHALL BE PROVIDED IN STRICT ACCORDANCE WITH THE RECOMMENDATIONS OF THE PIPING MANUFACTURER.

D. VALVES:

1. PROVIDE GATE VALVES, BUTTERFLY OR BALL VALVES FOR SHUT-OFF DUTY ON MAIN AND BRANCH SUPPLY LINES. FOR ALL PIPE RUNS 2" AND SMALLER, PROVIDE BALL FOR ALL PIPE RUNS LARGER THAN 2" AND SMALLER THAN 4", PROVIDE GATE VALVES. PIPING 4" AND LARGER, PROVIDE BUTTERFLY VALVES FOR SHUT-OFF DUTY.

2. ALL FIXTURES WITH THE EXCEPTION O FLUSHOMETER-EQUIPPED WATER CLOSETS AND URINALS SHALL HAVE STOP VALVES TO CONTROL SUPPLY TO THE FIXTURE. WHERE SUPPLIES ARE EXPOSED PROVIDE CHROME-PLATED STOPS WITH CHROME-PLATED ESCUTCHEONS ON PIPING PENETRATIONS.

3. ALL PLUMBING FIXTURES AND EQUIPMENT TO HAVE SHUT-OFF VALVES ON SUPPLY LINES.

4. ALL BRANCH LINES TO HAVE SHUT-OFF VALVES.

5. ALL VALVES SHALL BE ACCESSIBLE.PROVIDE ACCESS DOORS WHERE REQUIRED FOR VALVE ACCESS.

6. PROVIDE GLOBE VALVES FOR THROTTLING/BALANCING OF THE HOT WATER CIRCULATING SYSTEM.

E. INSTALL PIPING TO CONSERVE BUILDING SPACE. DO NOT INTERFERE WITH USE OF BUILDING SPACE AND THE WORK OF OTHER TRADES. ALL PIPING RUN IN CEILING SHALL BE INSTALLED TIGHT TO THE STRUCTURE ABOVE.

F. INSTALL PIPING TO ALLOW FOR EXPANSION AND CONTRACTION WITHOUT STRESSING PIPE, JOINTS OR CONNECTED EQUIPMENT. PROVIDE PIPE ANCHORS, GUIDES AND EXPANSION JOINTS OR LOOPS IN ALL HOT WATER AND HOT WATER CIRCULATING MAIN SUPPLY PIPING AND SEGMENTS OF SUCH PIPE THAT EXCEED 30'-0" IN LENGTH.

G. IN ALL AREAS WITH FINISHED SURFACES, SYSTEM PIPING AND COMPONENTS SHALL BE CONCEALED ABOVE OR WITHIN FINISHED SURFACES.

H. REDUCTIONS IN PIPE SIZES SHALL BE MADE WITH ONE-PIECE REDUCING FITTINGS. BUSHINGS ARE NOT ACCEPTABLE. USE FLANGED FITTINGS AT THE BASE OF RISERS.

I. VENT PENETRATIONS THROUGH THE ROOF SHALL BE FLASHED.

J. IF WATER PRESSURE EXCEEDS 80 PSI, A WATER PRESSURE REDUCING VALVE SHALL BE INSTALLED IN WATER PIPING AT CONNECTION TO MAIN.

K. PIPE BACKFLOW PREVENTER DRAINS TO FLOOR DRAIN OR OTHER APPROVED INDIRECT WASTE SOURCE.

L. PROVIDE ACCESS DOORS/PANELS FOR SERVICE AND ACCESS TO ALL VALVES AND OTHER SYSTEM COMPONENTS ENCLOSED IN WALLS AND CEILINGS. ACCESS DOORS SHALL BE FURNISHED BY THIS CONTRACTOR, INSTALLED BY THE GENERAL CONTRACTOR.

M. ALL FIXTURES REQUIRING VACUUM BREAKERS SHALL BE EQUIPPED WITH INTEGRAL VACUUM BREAKERS.

N. ANY PENETRATIONS THROUGH FIRE RATED PARTITIONS, FLOORS, OR CEILINGS SHALL BE STEEL SLEEVED AND SEALED WITH 3M BRAND UL RATED FIRE BARRIER CAULK OR APPROVED EQUAL.

O. WHEN THE WATER PIPING SYSTEM IS COMPLETE, THOROUGHLY FLUSH ALL DIRT, SEDIMENT, SOLDER, ETC., OUT OF THE SYSTEM, REMOVING ALL STRAINERS, VALVE STEM SEATS, ETC., REQUIRED TO ACCOMPLISH THE FLUSHING.

P. AT ALL INDIRECT WASTE DRAINS, MAINTAIN AIR GAP AS REQUIRED BY CODE.

Q. INSTALL SLEEVES FOR ALL PIPES WHICH PASS THROUGH WALLS, FLOORS, AND CEILINGS. WHERE PIPES ARE TO BE INSULATED, THE SLEEVE SHALL BE LARGE ENOUGH TO ACCOMMODATE INSULATION. SLEEVES SHALL BE FLUSH WITH FINISHED SURFACES AT BOTH ENDS. ON FINISHED SURFACES IN EXPOSED AREAS PROVIDE ESCUTCHEONS COMPATIBLE WITH FINISH.

2. INSTALLATION

2.01 GENERAL

A. ALL WORK WHICH REQUIRES DISRUPTION OF THE ROOFING SHALL BE DONE BY A CONTRACTOR CERTIFIED BY THE ROOFING MANUFACTURER AS REQUIRED TO MAINTAIN ANY EXISTING ROOF WARRANTIES.

B. EXTERIOR INSTALLATIONS TO BE WEATHER PROOF IN ALL RESPECT.

C. EXTERIOR MATERIALS AND EQUIPMENT SHALL BE PAINTED TO PREVENT CORROSION, COLOR PER ARCHITECT.

D. COORDINATE THE PLUMBING WORK WITH ALL OTHER AFFECTED WORK AND THE CONSTRUCTION SCHEDULE.

E. REAM PIPE AND TUBE ENDS. REMOVE BURRS. BEVEL PLAIN AND FERROUS END PIPE.

F. REMOVE SCALE AND FOREIGN MATERIAL, FROM INSIDE AND OUTSIDE, BEFORE ASSEMBLY.

G. PREPARE PIPING CONNECTIONS TO EQUIPMENT WITH FLANGES AND UNIONS.

H. COORDINATION WITH THE WORK OF OTHER TRADES IS REQUIRED. PROVIDE OFFSETS IN PIPING SYSTEMS OR MINOR DEVIATIONS TO THE INDICATED PIPE ROUTING IN ORDER TO COORDINATE THE PLUMBING WORK WITH THE WORK OF ALL OTHER TRADES AND THE GENERAL BUILDING CONDITIONS.

I. NO DOMESTIC WATER PIPING SHALL BE INSTALLED IN UNHEATED SPACES.

J. PRIOR TO DISCONNECTING AND CONNECTING NEW WORK TO EXISTING SYSTEMS, THE PLUMBING CONTRACTOR SHALL NOTIFY THE PROPERTY MANAGER AND OFFER A PROPOSED SCHEDULE OF WORK. ESB WILL AUTHORIZE CONNECTIONS AND COORDINATE NECESSARY SHUT DOWNS AND DRAIN DOWNS AS REQUIRED. SHUT DOWNS AND DRAIN DOWNS MAY BE PERFORMED BY THE PLUMBING CONTRACTOR ONLY AFTER RECEIVING ESB AUTHORIZATION, AND SHOULD BE PERFORMED UNDER SUPERVISION OF ESB PERSONNEL. THREE (3) DAYS ADVANCE NOTICE TO THE PROPERTY MANAGER IS REQUIRED.

K. THE PLUMBING CONTRACTOR IS ADVISED THAT DUE TO THE NATURE OF THE OPERATIONS AND TENANT REQUIREMENTS, CONNECTIONS TO EXISTING SYSTEMS MAY HAVE TO BE MADE AFTER REGULAR WORKING HOURS. THE PROPERTY MANAGER WILL ADVISE THE PLUMBING CONTRACTOR OF THE TIME CONSTRAINTS UPON RECEIPT AND APPROVAL OF THE PLUMBING CONTRACTOR'S REQUEST FOR SHUT DOWN AND CONNECTION TO EXISTING SYSTEMS.

L. WHEN CONNECTING TO EXISTING STACKS AND RISERS, PROVISION IS TO BE MADE FOR FUTURE CONNECTIONS BY PROVIDING CAPPED AND VALVED OUTLETS ON DOMESTIC WATER RISERS AND PLUGGED OUTLETS ON THE SANITARY AND VENT STACKS.

2.02 ABOVE GRADE

A. INSTALL PLUMBING PIPING IN ACCORDANCE WITH RECOGNIZED INDUSTRY PRACTICES TO ENSURE THAT PIPING COMPLIES WITH REQUIREMENTS AND SERVES INTENDED PURPOSES.

B. ROUTE PIPING IN AN ORDERLY MANNER, PLUMB AND PARALLEL TO BUILDING STRUCTURE. MAINTAIN GRADIENT. SLOPE PIPING AND ARRANGE SYSTEMS TO DRAIN. IN DOMESTIC WATER SYSTEMS, PROVIDE DRAIN VALVES AT MAIN SHUT-OFF VALVES AND ALL LOW POINTS IN PIPING.

C. USE EXISTING CONNECTIONS AT MAINS WHERE AVAILABLE FOR NEW BRANCH PIPING. LOCATE ALL RISERS AND PIPING BEFORE CONSTRUCTION COMMENCES AND TAKE CARE NOT TO DAMAGE SAME. ANY DAMAGE OCCURRING TO THE EXISTING PIPING WILL BE THE SOLE RESPONSIBILITY OF THE CONTRACTOR.

3. TESTING

A. AT THE COMPLETION OF THE PLUMBING WORK, COMPLETELY TEST THE ENTIRE INSTALLATION OF ALL SYSTEMS FOR PROPER OPERATION AND COMPLIANCE WITH APPLICABLE CODES AND LOCAL REQUIREMENTS. CORRECT ALL DEFICIENCIES FOUND.

B. TESTING OF THE INSTALLED SYSTEMS SHALL BE MADE BY THE CONTRACTOR IN THE PRESENCE OF A REPRESENTATIVE OF THE OWNER.

C. THE CONTRACTOR SHALL NOT COVER UP OR PERMANENTLY CONCEAL PIPING, DEVICES OR ANY PORTION OF NEWLY CONSTRUCTED PLUMBING SYSTEM(S) UNTIL SUCH SYSTEM, OR PORTION OF THE SYSTEM, HAS BEEN TESTED IN THE PRESENCE OF A REPRESENTATIVE OF THE OWNER AND INSPECTED BY THE LOCAL INSPECTOR AND APPROVED IN WRITING, EXCEPT PIPING PASSING THROUGH FLOORS, WALLS, PARTITIONS, OR BEAMS, FOR DISTANCES EQUAL TO THE THICKNESS OF SUCH FLOOR, WALL, PARTITION OR BEAM.

D. THIS CONTRACTOR SHALL NOTIFY THE VARIOUS DEPARTMENTS, BUREAUS AND INDIVIDUALS AT LEAST TWO WEEKS IN ADVANCE OF THE TIME THAT THE TESTS ARE TO BE CONDUCTED.

E. ALL DEFECTIVE PARTS SHALL BE REPLACED OR CORRECTED BY THIS CONTRACTOR AND AN EXTRA TEST OR TESTS SHALL BE MADE UNTIL THE OPERATION IS SATISFACTORY. ALL ARRANGEMENTS AND EXPENSES NECESSARY TO CONDUCT ALL TESTS REQUIRED BY THESE SPECIFICATIONS AND THE VARIOUS AGENCIES HAVING JURISDICTION OVER THE WORK INSTALLED UNDER THIS CONTRACT SHALL BE MADE BY THIS CONTRACTOR. NO EXTRA COMPENSATION WILL BE ALLOWED FOR THESE TESTS, THE COST THEREOF BEING INCLUDED IN THE LUMP SUM BID FOR THIS CONTRACT.

F. WHERE ANY EVIDENCE OF STOPPAGE IS FOUND IN PIPING OR EQUIPMENT, THIS CONTRACTOR SHALL DISCONNECT, CLEAN, REPAIR AND RECONNECT ALL OBSTRUCTED PIPING OR EQUIPMENT AND SHALL ALSO PAY FOR ALL NECESSARY CUTTING AND REPAIRS TO ADJOINING WORK.

G. ALL PIPING AND EQUIPMENT SHALL BE THOROUGHLY CLEANED INSIDE AND OUT, OF DIRT, CUTTINGS, OILS AND OTHER FOREIGN SUBSTANCES AND SHALL BE LEFT CLEAN.

H. ALL REQUIRED TESTS SHALL BE WITNESSED BY LOCAL AUTHORITIES AND THE OWNER'S REPRESENTATIVE.

J. ALL EQUIPMENT WILL BE FACTORY TESTED.

I. CONTRACTOR SHALL IDENTIFY TO THE OWNER'S REPRESENTATIVE ANY LEAKS OR DAMAGE THAT OCCURS AS A RESULT OF SYSTEM TESTING. CONTRACTOR SHALL TAKE NECESSARY PRECAUTIONS TO LIMIT ANY POTENTIAL DAMAGE. CORRECTIVE ACTION REQUIRED AS A RESULT OF TESTING SHALL BE PERFORMED IMMEDIATELY AND AT THE CONTRACTOR'S EXPENSE.

K. REPORT IN WRITING TO AUTHORITIES HAVING JURISDICTION, THE ARCHITECT AND THE OWNER THE RESULTS OF ALL TESTING.

L. TESTING REQUIREMENTS
   a. TEST ALL DOMESTIC WATER PIPING HYDROSTATICALLY TO 125 PSIG.
   b. HYDROSTATIC TEST PRESSURES SHALL REMAIN CONSTANT WITH NO VARIATION FOR 120 MINUTES.
   c. TESTS SHALL BE WITNESSED BY THE BUILDING ENGINEER.
   d. THE PLUMBING CONTRACTOR WILL BE HELD RESPONSIBLE FOR ALL DAMAGE DUE TO TEST FAILURES AND LEAKAGE IN THE TEST AREA AND ADJACENT TENANT OR ESB SPACES.

M. REFILL ENTIRE POTABLE HOT AND COLD WATER SUPPLY SYSTEM WITH CHLORINE SOLUTION (HTH OLIN CHEMICAL CORP.) AT A STRENGTH TO MEET STANDARDS OF THE DEPARTMENT OF HEALTH, AND FOR A PERIOD OF RETENTION AS STIPULATED.

N. THOROUGHLY FLUSH PIPING SYSTEM WITH FRESH WATER IMMEDIATELY PRIOR TO FINAL ACCEPTANCE.

Property of NY Engineers

DESIGN PROFESSIONAL

NY ENGINEERS

382 NE 191st Street Suite 49674
MIAMI, FL 33179
(786)-788-0295
ny-engineers.com

DATES

PROJECT

TITLE

PLUMBING NOTES, SYMBOLS, ABBREVATIONS, & SPECIFICATIONS

SHEET NO.

P0.1

4. WARRANTY

A. EQUIPMENT, MATERIALS AND WORKMANSHIP FURNISHED UNDER THIS CONTRACT SHALL BE GUARANTEED BY THE CONTRACTOR FOR A PERIOD OF ONE YEAR FROM THE DATE OF FINAL ACCEPTANCE OF THE WORK BY THE OWNER. THE CONTRACTOR SHALL KEEP THE WORK IN GOOD REPAIR FOR ONE YEAR AFTER THE DATE OF FINAL APPROVAL. THE CONTRACTOR SHALL, AT HIS OWN EXPENSE, PROMPTLY CORRECT AND REPAIR ANY AND ALL BREAKS, FAILURES OR WEAR DUE TO FAULTY MATERIALS, WORKMANSHIP OR EQUIPMENT. ALL SETTLEMENTS OF SURFACES THAT MAY OCCUR WITHIN THAT PERIOD SHALL ALSO BE PROMPTLY REPAIRED.

B. ELECTRIC STORAGE WATER HEATERS

1. TANK SHALL BE 50 GALLON CAPACITY AND SHALL HAVE 150 PSI WORKING PRESSURE AND BE EQUIPPED WITH EXTRUDED HIGH DENSITY ANODE.

2. ALL INTERNAL SURFACES OF THE HEATER EXPOSED TO WATER SHALL BE GLASS-LINED WITH AN ALKALINE BORO SILICATE COMPOSITION THAT HAS BEEN FUSED-TO-STEEL BY FIRING AT A TEMPERATURE RANGE OF 1400°F TO 1600°F.

3. ELECTRIC HEATING ELEMENTS SHALL BE LOW WATT DENSITY GOLDENROD 1" SCREW-IN TYPE.

4. EACH ELEMENT SHALL BE CONTROLLED BY AN INDIVIDUALLY MOUNTED THERMOSTAT AND HIGH TEMPERATURE CUT-OFF SWITCH. ALL INTERNAL CIRCUITS SHALL BE FUSED. THE OUTER JACKET SHALL BE OF BAKED ENAMEL FINISH AND SHALL BE PROVIDED WITH FULL SIZE CONTROL COMPARTMENT FOR PERFORMANCE OF SERVICE AND MAINTENANCE THROUGH HINGED FRONT PANEL AND SHALL ENCLOSE THE TANK WITH FOAM INSULATION. ELECTRICAL JUNCTION BOX WITH HEAVY DUTY TERMINAL BLOCK SHALL BE PROVIDED. THE DRAIN VALVE SHALL BE LOCATED IN THE FRONT FOR EASE OF SERVICING.

Property of NY Engineers

DESIGN PROFESSIONAL
NY ENGINEERS
382 NE 191st Street Suite 49674
MIAMI, FL 33179
(786)-788-0295
ny-engineers.com

DATES

PROJECT

TITLE

PLUMBING SPECIFICATIONS

SHEET NO.

P0.2

WATER GENERAL NOTES:

A. CW/HW PIPING TO BE PROVIDED WITH INSULATION AS PER 2022 CALIFORNIA ENERGY CODE.

B. PROVIDE BRANCH PRV IF PRESSURE EXCEEDS 80 PSI.

C. PROVIDE ACCESS PANELS FOR WATER HAMMER ARRESTOR & SHUT-OFF VALVES AS REQUIRED.

D. REFER RISER DIAGRAMS FOR ALL PIPE SIZES.

WATER KEY NOTES:

1. CONNECT NEW 1" CW PIPING TO THE EXISTING COLD WATER STUB IN SPACE WITH EXISTING WATER METER AND NEW 1" BACKFLOW PREVENTOR. CONTRACTOR TO FIELD VERIFY THE SIZE, ROUTING AND LOCATION OF EXISTING CW LINE.
2. PROVIDE A TEMPERATURE MIXING VALVE FOR ALL HAND SINK. SET TEMPERATURE TO A MAXIMUM OF 110°F.
3. R/O FILTERED WATER FROM ITEM #50 R/O SYSTEM; DISTRIBUTE IN PEX FOOD GRADE LINE TO ICE MACHINE, HOT WATER TOWER, ESPRESSO MACHINES, STEAMERS, POUR OVER COFFEE AND COLD SIDE OF DUMP SINK.
4. PROVIDE 1/2" RO FILTER WATER TO ESPRESSO MACHINE AND POUR OVER COFFEE WITH BFP-1 AFTER SHUT OFF VALVE.
5. PROVIDE 1/2" RO FILTER WATER TO ICE MACHINE, HOT WATER TOWER AND STEAMERS WITH BFP-2 AFTER SHUT OFF VALVE.
6. WATER FILTER SYSTEM. REFER TO DETAIL #11 ON SHEET P2.0.

WATER HEATER SIZING

GPH VALUES FROM APPENDIX I: GUIDELINES FOR SIZING WATER HEATERS DOCUMENT PREPARED BY CALIFORNIA CONFERENCE OF DIRECTORS OF ENVIRONMENTAL HEALTH

FIXTURE	QUANTITY	GPH PER FIXTURE	TOTAL GPH
HAND SINK	3	5	15
KITCHEN SINK	2	5	10
MOP SINK	1	15	15
DISHWASHER	1	30	30
3-COMP SINK	1	42	42
TOTAL			112

CONSIDERING A GROUND WATER TEMPERATURE OF 60°F & A MAX TEMP OF 140 DEG F. TEMP RISE = 140-60 = 80°F.

ASSUMING AN OPERATING EFFICIENCY OF 100%.

KW INPUT = (112 X 80 X 8.33) / (0.98 X 3412) = 22.32 KW

2

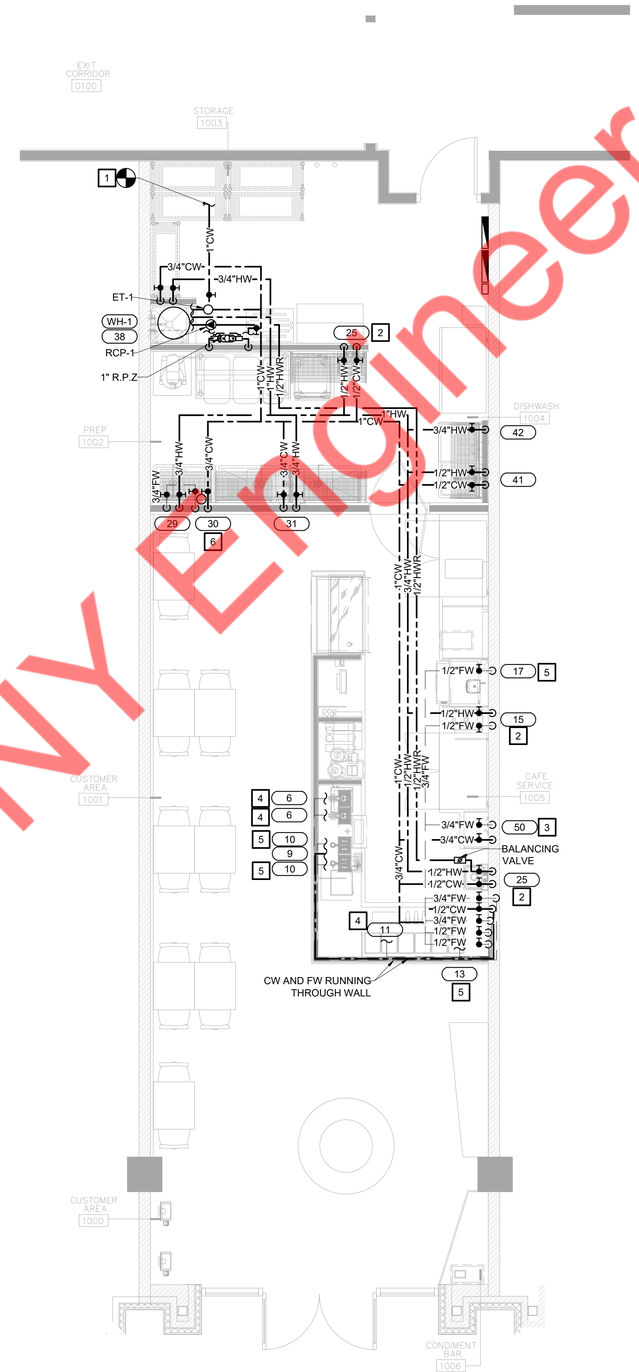

1 P1.0 WATER FLOOR PLAN
SCALE: 1/4"=1'-0"

0 5 10 15
SCALE BAR 1/4"=1'-0"

Property of NY Engineers

DESIGN PROFESSIONAL
NY ENGINEERS
382 NE 191st Street Suite 49674
MIAMI, FL 33179
(786)-788-0295
ny-engineers.com

DATES

HEALTH COMMENTS #2 2025.09.01

PROJECT

TITLE

PLUMBING WATER FLOOR PLAN

SHEET NO.

P1.0

SANITARY GENERAL NOTES:

A. CONTRACTOR TO FIELD VERIFY FEASIBILITY OF SLAB PENETRATION AS PER STRUCTURAL REQUIREMENT.

B. REFER RISER DIAGRAMS FOR ALL PIPE SIZES.

C. THE VENT SHALL RISE 6 INCHES VERTICALLY ABOVE THE FLOOD RIM LEVEL OF THE FIXTURE BEING VENTED BEFORE OFFSETTING HORIZONTALLY OR VERTICALLY DOWNWARD BEFORE CONNECTING TO THE OUTSIDE VENT TERMINAL.

SANITARY AND VENT KEY NOTES:

1. CONNECT NEW 4" GREASE WASTE PIPING TO EXISTING GREASE WASTE STUB IN SPACE. CONTRACTOR TO FIELD VERIFY EXACT SIZE, LOCATION, FLOW DIRECTION AND INVERT OF EXISTING PIPE ON SITE.
2. CONNECT NEW 3" VENT PIPING TO EXISTING VENT LINE IN SPACE. CONTRACTOR TO FIELD VERIFY EXACT SIZE, AND LOCATION OF EXISTING PIPE ON SITE. UPGRADE THE PIPE IF REQUIRED.
3. ROUTE INDIRECT CONDENSATE DRAIN FROM WATER HEATER TO MOP SINK WITH APPROVED AIR GAP.
4. ROUTE INDIRECT DRAIN FROM PROPOSED RPZ TO FLOOR DRAIN WITH APPROVED AIR GAP.
5. ROUTE INDIRECT DRAIN FROM 3-COMPARTMENT SINK, WATER FILTER SYSTEM AND PREP SINK TO FLOOR SINK WITH APPROVED AIR GAP.
6. ROUTE INDIRECT DRAIN FROM ICE MACHINE, RO SYSTEM AND DUMP SINK TO FLOOR SINK WITH APPROVED AIR GAP.
7. ROUTE INDIRECT DRAIN FROM ESPRESSO MACHINE, GLASS RINSER, ICE BIN AND STEAMER TO FLOOR SINK WITH APPROVED AIR GAP.
8. EXTEND AND ROUTE INDIRECT DRAIN FROM DISHWASHER TO HUB DRAIN WITH APPROVED AIR GAP.
9. ROUTE INDIRECT CONDENSATE DRAIN FROM AC-1 , AC-2 AND AC-3 TO MOP SINK WITH APPROVED AIR GAP.
10. EXTEND CONNECT NEW 4" SANITARY WASTE PIPING TO EXISTING SANITARY STUB IN SPACE. CONTRACTOR TO FIELD VERIFY EXACT SIZE, LOCATION, FLOW DIRECTION AND INVERT OF EXISTING PIPE ON SITE.
11. ROUTE INDIRECT DRAIN FROM UNDERCOUNTER DISHTABLE TO FLOOR SINK WITH APPROVED AIR GAP.

GREASE INTERCEPTOR SIZING CALCULATIONS

SR. NO.	FIXTURE	QUANTITY	DFU	TOTAL DFU'S
1	FLOOR SINK	3	6	18
2	MOP SINK	1	3	3
3	HAND SINK	2	3	6
4	UNDERCOUNTER DISHTABLE	1	2	2
TOTAL				29

AS PER 2022 CALIFORNIA PLUMBING CODE, SECTION 1014.3.6, & TABLE 1014.3.6 FOR 29 DFU'S, MINIMUM OF 1000 GALLONS GREASE INTERCEPTOR IS REQUIRED.

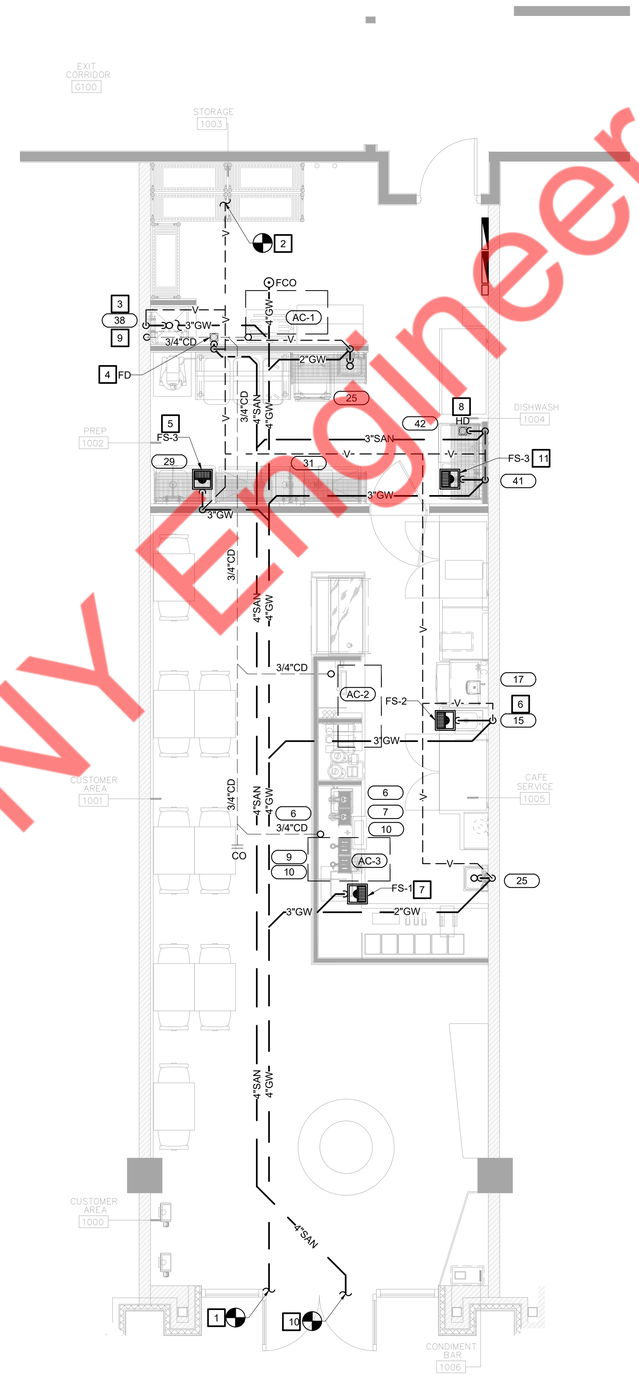

1 P1.1 SANITARY FLOOR PLAN
SCALE: 1/4"=1'-0"

0 5 10 15
SCALE BAR 1/4"=1'-0"

Property of NY Engineers

DESIGN PROFESSIONAL
NY ENGINEERS
382 NE 191st Street Suite 49674
MIAMI, FL 33179
(786)-788-0295
ny-engineers.com

DATES

PROJECT

TITLE

PLUMBING SANITARY FLOOR PLAN

SHEET NO.

P1.1

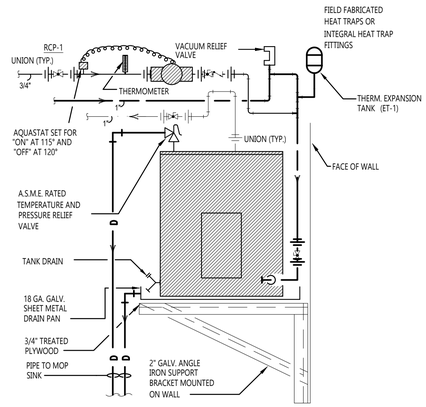

NOTE: CONTRACTOR TO CO-ORDINATE WITH STRUCTURAL ENGINEER FOR WATER HEATER MOUNTING REQUIREMENTS.

1 P2.0 WATER HEATER DETAIL
SCALE: N.T.S.

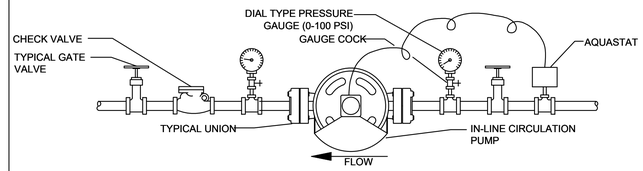

2 P2.0 INLINE RETICULATING PUMP DETAIL
SCALE: N.T.S.

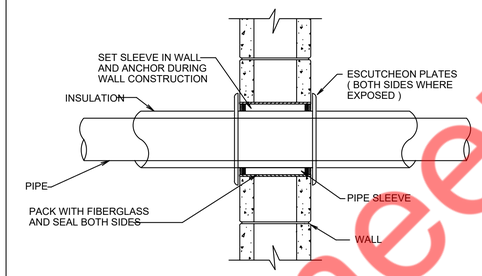

3 P2.0 PIPE SLEEVE THRU WALL SECTION
SCALE: N.T.S.

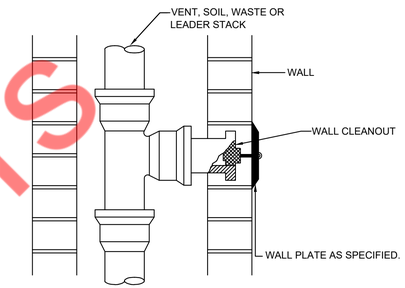

4 P2.0 WALL CLEANOUT DETAIL
SCALE: N.T.S.

CONCEALED VALVES AND FITTINGS

* WRAP WITH 1-INCH THICK, 1-POUND DENSITY TO REQUIRED PIPE INSULATION THICKNESS
* SECURE WITH WIRE OR TAPE.
* VAPOR SEAL COLD WATER, CHILLED WATER AND STORM WATER PIPING.

CONCEALED VALVES AND FITTINGS

* PREMOLDED FIBER GLASS OR RADIAL MITERED PIPE INSULATION
* SKIM COAT OF INSULATION CEMENT
* COAT OF MASTIC
* WRAP WITH FIBER GLASS REINFORCING CLOTH.
* FINISH COAT OF MASTIC
* OVERLAP 2-INCHES ON PIPE INSULATION.

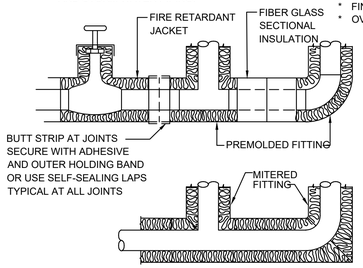

5 P2.0 INSULATION FOR EXPOSED AND CONCEALED LOCATIONS
SCALE: N.T.S.

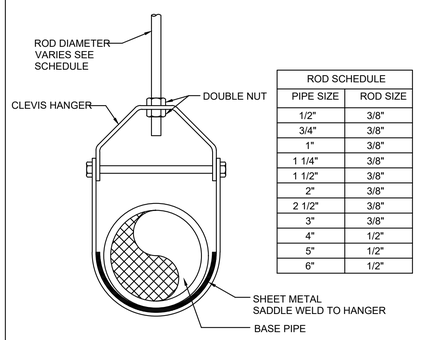

ROD SCHEDULE	
PIPE SIZE	ROD SIZE
1/2"	3/8"
3/4"	3/8"
1"	3/8"
1 1/4"	3/8"
1 1/2"	3/8"
2"	3/8"
2 1/2"	3/8"
3"	3/8"
4"	1/2"
5"	1/2"
6"	1/2"

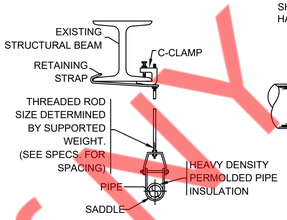

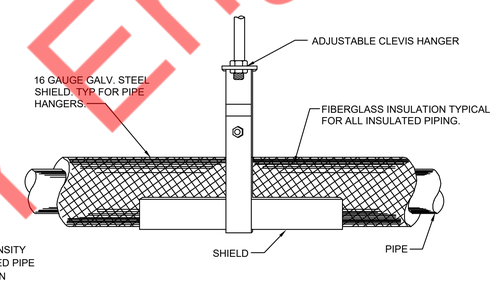

6 P2.0 HANGER DETAIL
SCALE: N.T.S.

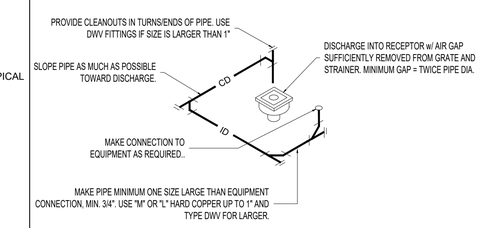

ROUTE PIPE INCONSPICUOUSLY AND UNOBTRUSIVELY. HANG PIPE AS REQUIRED. DO NOT INSULATE INDIRECT DRAIN PIPE WHEN INSTALLED EXPOSED IN FOOD SERVICE FACILITY. REFER TO LOCAL CODES FOR FURTHER INFORMATION.

7 P2.0 INDIRECT WASTE DETAIL
SCALE: N.T.S.

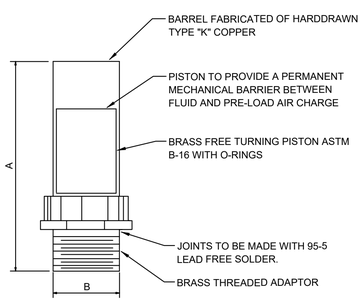

PIPE SIZE	P.D.I. SYMBOL	FIXTURE UNIT RATINGS	A SIZE	B SIZE
1/2"	A	1 - 11	5"	1/2"
3/4"	B	12 - 32	5"	3/4"
1"	C	33 - 60	7"	1"
1-1/4"	D	61 - 113	7"	1-1/4"
1-1/2"	E	114 - 154	9"	1-1/2"
2"	F	155 - 330	9"	2"

NOTE: LOCATE ONE FOR EACH BANK OF FLUSHOMETER
FIXTURES AT LAST FIXTURE PROVIDE A STAINLESS STEEL
ACCESS DOOR FOR EACH SUFFICIENT IN SIZE TO ALLOW
REPLACEMENT OF ARRESTOR AT A FUTURE DATE.

8 P2.0 WATER HAMMER ARRESTOR DETAIL
SCALE: N.T.S.

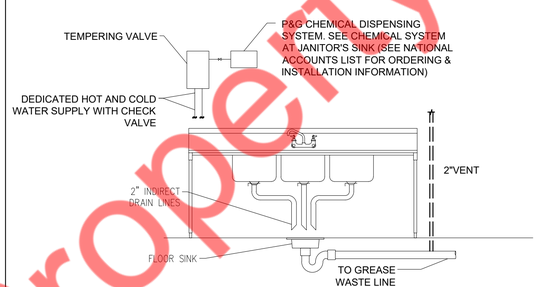

COMMENTS:

1. COORDINATE INDIVIDUAL BAY DRAINAGE , AIR GAP, & DRAIN FUNNEL WITH LOCAL CODE REQUIREMENTS.

9 P2.0 THREE COMPARTMENT SINK DETAIL
SCALE: N.T.S.

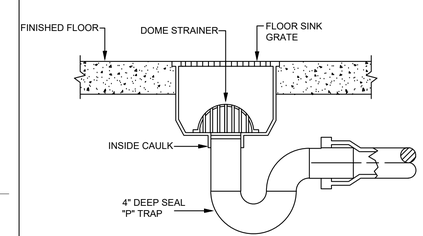

NOTE: P.C. SHALL PROVIDE TRAP GUARD AT DRAINS NOT WASHED BY A HOSE BIBB. TRAP GUARD = ZURN #Z1072. PROVIDE TRAP PRIMER IF REQUIRED BY AHJ. PRIMER = ZURN MODEL #Z1022 OR APPROVED EQUAL.

10 P2.0 FLOOR SINK DETAIL
SCALE: N.T.S.

1. EVERPURE EV9330-42 FILTER SYSTEM AND MANIFOLD, INCOMING WATER PRESSURE MAX. 80 PSI
2. ENTIRE UNIT WEIGHS APPROXIMATELY 30 LBS; GC TO PROVIDE ADEQUATE BACKING

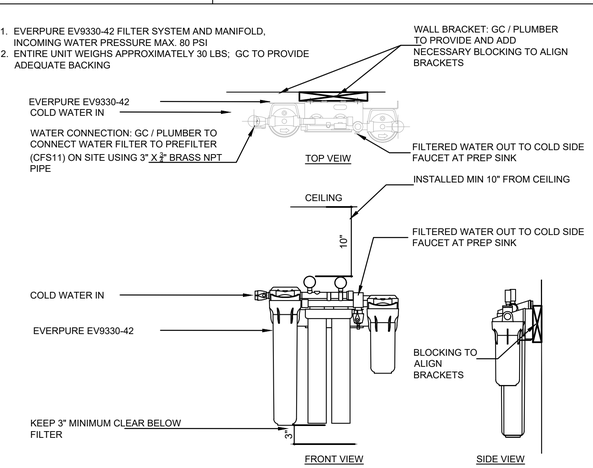

11 P2.0 WATER FILTER DETAIL
SCALE: N.T.S.

Property of NY Engineers

DESIGN PROFESSIONAL
NY ENGINEERS
382 NE 191st Street Suite 49674
MIAMI, FL 33179
(786)-788-0295
ny-engineers.com

DATES

PROJECT

TITLE

PLUMBING DETAILS

SHEET NO.

P2.0

FOOD SERVICE PLUMBING SCHEDULE

TAG	QTY	FIXTURE TYPE	HW	CW	FW	VENT	WASTE	MANUFACTURER	MODEL NUMBER
6	2	ESPRESSO SYSTEM			1/2"	2"	FS - INDIRECT	MODBAR	AV
7	1	ICE BIN, UNDERCOUNTER				2"	FS - INDIRECT	DELFIELD	240
9	1	DRIP PAN, GLASS RINSER		1/2"		2"	FS - INDIRECT	MICRO MATIC USA	DP-120DGR
10	2	STEAM SYSTEM			1/2"	2"	FS - INDIRECT	MODBAR	STEAM
11	1	POUR OVER COFFEE			1/2"	2"	FS - INDIRECT	POURSTEADY	PS2
13	2	HOT WATER TAP	1/2"					MARCO	UC3 W/3BMIX
15	1	SINK, DROP-IN W/ FAUCET	1/2"	1/2"		2"	FS - INDIRECT	ADVANCE TABCO	DI-1-10SP
17	1	UC ICE MACHINE			1/2"	2"	FS - INDIRECT	AVANTCO	UC-F-210-A 26
25	2	HAND SINK, WALL MOUNT	1/2"	1/2"		1-1/2"	2" - DIRECT	GSW	HS-1615W
29	1	SINK, FOOD PREPARATION W/ FAUCET	3/4"	3/4"		2"	FS - INDIRECT	GSW	SEE18181L
38	1	MOP SINK	3/4"	3/4"		2"	3" - DIRECT	ZURN	1996-24
41	1	DISHTABLE, UNDERCOUNTER W/ FAUCET	1/2"	1/2"		2"	3" - DIRECT	EAGLE GROUP/METAL MASTERS	UDT-4L-14/3
42	1	WAREWASHER, UNDERCOUNTER, LOW TEMP	3/4"				FS - INDIRECT	JACKSON WWS	DISHSTAR LT
50	1	300 R/O SYSTEM		3/4"				CUSTOM	CUSTOM
FD	1	FLOOR DRAIN				2"	4" - DIRECT	ZURN	ZS-415 TYPE "S"
FS-1	1	FLOOR SINK @ ESPRESSO SYSTEM				2"	3" - DIRECT	MIFAB	FS730-150
FS-2	1	FLOOR SINK @ ICE MACHINE				2"	3" - DIRECT	MIFAB	FS730-150
FS-3	2	FLOOR SINK @ PREP SINK				2"	3" - DIRECT	MIFAB	FS730-150
FCO	1	FLOOR CLEAN OUT					LINE SIZE	JAY R. SMITH	4020 SERIES W/ROUND, POLISHED BRONZE TOP

PLUMBING EQUIPMENT NOTES:

1. IT SHALL BE THE PLUMBING CONTRACTORS RESPONSIBLITY TO MAKE ALL FINAL CONNECTIONS FROM KITCHEN/BAR EQUIPMENT TO THE PLUMBING MAINS SHOWN ON THIS PLAN.
2. THE PLUMBING CONNECTION SCHEDULE ON THIS PLAN RELATES REQUIRED CONNECTIONS TO INDIVIDUAL EQUIPMENT ONLY.
3. PLUMBING CONTRACTOR SHALL REFER TO "KITCHEN EQUIPMENT COMPANY" CUT SHEETS FOR ALL ROUTING OF FINAL CONNECTIONS TO EQUIPMENT AND EXACT ROUGH-IN LOCATIONS.
4. PLUMBING CONTRACTOR SHALL MOUNT ALL FLOOR SINKS FLUSH WITH FINISHED FLOOR ELEVATION.
5. ALL FLOOR DRAINS ARE WASHED BY HOSE BIBBS LOCATED IN KITCHEN.

PLUMBING PIPE MATERIAL SCHEDULE

PIPING SYSTEM	ABBREVIATION	PIPING MATERIAL
SANITARY DRAINAGE & VENT (ABOVE GRADE)	SAN OR V	SCH.40 PVC*/ CAST IRON / COPPER
SANITARY DRAINAGE & VENT (BELOW GRADE)	SAN OR V	SCH.40 PVC*/ CAST IRON / COPPER
POTABLE WATER (ABOVE GRADE)	CW, HW OR HWR	TYPE L HARD-DRAWN COPPER PIPE AND FITTINGS (CPVC PIPING AND FITTINGS OR PEX PIPING AND FITTINGS ALLOWED IF AHJ AND LANDLORD PERMITS).
POTABLE WATER - 2" & SMALLER (BELOW GRADE)	CW, HW OR HWR	TYPE K SOFT ANNEALED COPPER

*ALL PLUMBING SYSTEMS (SANITARY, WASTE, VENT,GAS, WATER DISTRIBUTION PIPING SYSTEMS) AND ASSOCIATED EQUIPMENT SHALL BE INSTALLED, OPERATED AND MAINTAINED IN ACCORDANCE WITH THE REQUIREMENTS OF 2022 CALIFORNIA PLUMBING CODE. PVC ONLY WHERE ALLOWABLE PER LOCAL AHJ. PVC SHALL NOT BE USED WHERE EXPOSED IN RETURN AIR PLENUM, OR WHERE WATER TEMPS EXCEED 140°F

EXPANSION TANK SCHEDULE

TAG	DESCRIPTION	VOLUME (GALLONS)	DIAMETER (INCHES)	HEIGHT (INCHES)	SELECTION BASED ON		REMARKS
					MANUFACTURER	MODEL NUMBER	
ET-1	BLADDER TYPE	2.0	8"	12 1/2"	AMTROL	ST-5C-DD	NOTE 1

NOTES:
1. INSTALL EXPANSION TANK ON IN-COMING COLD WATER PER MANUFACTURERS REQUIREMENTS.

THERMOSTATIC MIXING VALVE SCHEDULE

TAG	DESCRIPTION	MAXIMUM GPM	MINIMUM GPM	PRESSURE LOSS	SELECTION BASED ON		REMARKS/OPTIONS
					MANUFACTURER	MODEL NUMBER	
TMV	THERMOSTATIC MIXING VALVE	3.5	0.25	5	LEONARD	270-LF	NOTE 1, A

OPTIONS (ALL UNITS)
- LEAD FREE NSF APPROVED
- PROVIDE T'STAT ON TEMPERED LINE

ADDITIONAL OPTIONS (UNITS AS NOTED)
A: ASSE 1070 APPROVED, SET @110°F. $\frac{1}{2}$" INLET/ $\frac{1}{2}$" OUTLET, MOUNT BELOW FIXTURE.

NOTES:
1. INSTALL MIXING VALVE PER MANUFACTURERS REQUIREMENTS. PROVIDE ALL PIPING AND VALVES PER O&M MANUAL.

RECIRCULATION PUMP SCHEDULE

TAG	DESCRIPTION	TYPE	CAPACITY		ELECTRICAL DATA				SELECTION BASED ON		REMARKS/OPTIONS
			GPM	HEAD (ft.)	HP	V	PH	HZ	MANUFACTURER	MODEL NUMBER	
RCP-1	HOT WATER RECIRC. PUMP	IN-LINE	2.5	10	1/12	120	1	60	BELL & GOSSETT	PL-30-B	NOTE 1,2

OPTIONS (ALL RCP UNITS)
- AQUA-STAT & NIGHT TIMER
- FLANGED PUMP
- BALANCING VALVE & CHECK VALVE
- MAINTENANCE BALL VALVES ON BOTH SIDES OF PUMP

OPTIONS (ALL SUMP UNITS)
- 30"X30"X30" BASIN BY G.C.
- DISCHARGE CHECK VALVE
- DISCHARGE BALL VALVE

ADDITIONAL OPTIONS (UNITS AS NOTED)
A: OIL-MINDER ALARM/CONTROL SYSTEM

NOTES:
1 . SET AQUA-STAT WITH SET POINT 10 DEGREES BELOW SYSTEM SUPPLY TEMP.
2 . INSTALL RECIRCULATION PUMP PER MANUFACTURERS REQUIREMENTS.

BACKFLOW PREVENTOR SCHEDULE

LOCATION	TAG	MODEL	ASSE
MAIN WATER SUPPLY	RPZ	WATTS LF009M2-QT	1013
ESPRESSO MACHINE,POUR OVER COFFEE	BFP-1	WATTS SD-3	1022
ICE MACHINE, STEAMERS, HOT WATER TOWER.	BFP-2	WILKINS 1/2" #760	1012

NOTE:
VERIFY BACKFLOW VALVE REQUIREMENTS AND APPROVAL FOR ALL EQUIPMENT WITH AUTHORITIES HAVING JURISDICTION PRIOR TO INSTALLATION.

ELECTRIC STORAGE WATER HEATER SCHEDULE

TAG No.	NO. OF ELEMENTS	STORAGE GALLONS	RECOVERY CAP. (GPM @ RISE)	ELECTRICAL				MANUFACTURER & MODEL NO.	REMARKS
				VOLTS	PHASE	HERTZ	INPUT KW		
WH-1	2	50	123 GPH @ 80°F (2)	480	3	60	24 (2)	A.O. SMITH DRE-52	-DIMENSIONS 21.75"D X 55.75"H -HEATERS SHALL HAVE 150PSI WORKING PRESSURE -SIMULTANEOUS OPERATION

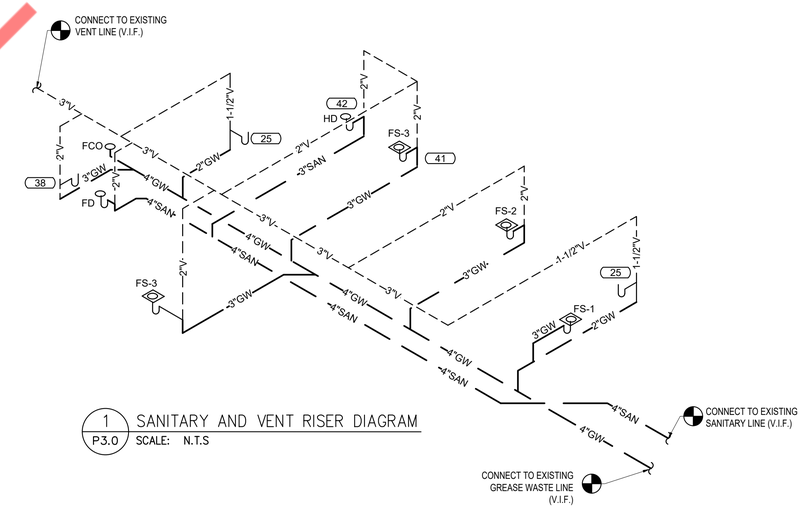

1 P3.0 SANITARY AND VENT RISER DIAGRAM
SCALE: N.T.S

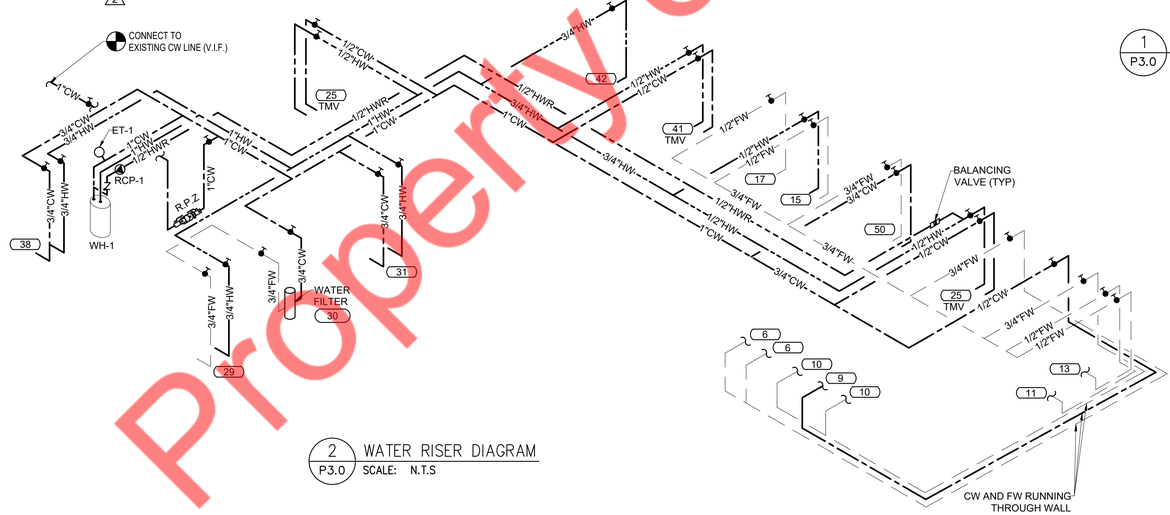

2 P3.0 WATER RISER DIAGRAM
SCALE: N.T.S

Property of NY Engineers

DESIGN PROFESSIONAL
NY ENGINEERS
382 NE 191st Street Suite 49674
MIAMI, FL 33179
(786)-788-0295
ny-engineers.com

01-23-2025 ISSUED FOR PERMIT

DATES

HEALTH COMMENTS #2 2025.09.01

PROJECT

TITLE

PLUMBING SCHEDULE AND RISER DIAGRAMS

SHEET NO.

P3.0

STATE OF CALIFORNIA

Domestic Water Heating System

CALIFORNIA ENERGY COMMISSION

CERTIFICATE OF COMPLIANCE		NRCC-PLB-E
Project Name: KONA ISLAND COFFEE	Report Page:	(Page 1 of 7)
Project Address: 2565 California St. # 84 Mountain View Ca. 94040	Date Prepared:	2025-07-23T07:58:00-04:00

This document is used to demonstrate compliance for nonresidential occupancies with requirements in 110.1, 110.3, 120.3, and 140.5, and with requirements in 141.0 for additions and alterations, for domestic water heating scopes using the prescriptive path. For high-rise residential and hotel/motel occupancies compliance is demonstrated with requirements in 110.1, 110.3, 160.4 and 170.2(d), and with requirements 180.1 for additions and 180.2 for alterations.

A. GENERAL INFORMATION

01	Project Location (city)	MOUNTAIN VIEW	02	Climate Zone	4
03	Occupancy Types Within Project (select all that apply):				

● Restaurant

B. PROJECT SCOPE

This table includes domestic water heating systems that are within the scope of the permit application and are demonstrating compliance using the prescriptive paths outlined in 140.5/ 170.2(d) and 141.0(a)/ 180.1, or 141.0(b)2N / 180.2 for additions or alterations. Solar water heating systems are documented on the NRCC-SAB compliance document. Combined hydronic water heating systems are documented on the NRCC-MCH compliance document.

01	02	03
My project consists of (check all that apply):	System Type[1,2]	System Components
☒ New system (DHW system being installed for the first time)	Individual System (serving nonresidential spaces)	☒ Equipment ☒ Distribution ☒ Controls
☐ System Alteration (equipment, distribution or controls)		☐ Equipment ☐ Distribution ☐ Controls

[1] *FOOTNOTES: Point of use water heaters, or other non-central systems used to serve nonresidential spaces, are considered individual systems.*
[2] *Dwelling units refers to hotel/motel guest rooms and units in a multifamily residential occupancy.*
[3] *DHW systems serving 2 or more dwelling units are considered "Central Systems" for multifamily occupancies*

C. COMPLIANCE RESULTS

Table C will indicate if the project data input into the compliance document is compliant with water heating requirements. If this table says "DOES NOT COMPLY" or "COMPLIES with Exceptional Conditions" refer to Table D. or the table indicated as not compliant for guidance.

01	02	03	04
Domestic Hot Water Equipment	Distribution Systems	Controls	**Compliance Results**
Table F	Table G	Table H	
Yes	Yes	Yes	COMPLIES

D. EXCEPTIONAL CONDITIONS

This table is auto-filled with uneditable comments because of selections made or data entered in tables throughout the form.

STATE OF CALIFORNIA

Domestic Water Heating System

CALIFORNIA ENERGY COMMISSION

CERTIFICATE OF COMPLIANCE		NRCC-PLB-E
Project Name: KONA ISLAND COFFEE	Report Page:	(Page 2 of 7)
	Date Prepared:	2025-07-23T07:58:00-04:00

E. ADDITIONAL REMARKS

This table includes remarks made by the permit applicant to the Authority Having Jurisdiction.

STATE OF CALIFORNIA

Domestic Water Heating System

CALIFORNIA ENERGY COMMISSION

CERTIFICATE OF COMPLIANCE		NRCC-PLB-E
Project Name: KONA ISLAND COFFEE	Report Page:	(Page 3 of 7)
	Date Prepared:	2025-07-23T07:58:00-04:00

F. DOMESTIC HOT WATER EQUIPMENT

This table is used to demonstrate compliance with mandatory equipment requirements in 110.1 and 110.3. Compliance with prescriptive requirements in 140.5(c) / 170.2(d) must also be demonstrated and with 141.0 / 180.1/ 180.2 for addition and alteration scopes.

Equipment Schedule: Water Heating Efficiency and Standby Loss

03		04			05			06	
System Name	WH-1	Exception to 140.5(c)/ 170.2(d)3		Exceptions Do Not Apply	☐	Gas Service Water Heating System >= 1MMBtu/h[1]	Capacity-weighted Average Efficiency %		
07	08	09	10		11	12	13	14	15
Name or Item Tag	Equipment Type	Volume (gal)	Rated Input Capacity (Btu/h)	Max GPM/ First Hour Rating (FHR)	Rated Efficiency	Minimum Efficiency Required	Efficiency Unit	Designed Standby Loss	Maximum Standby Loss
WH-1	Commercial Electric Storage Water Heater	50						0.84	0.84

[1] *FOOTNOTE: In systems >= 1MMBtu/h with multiple units, gas water heaters with input capacity > 100,000 Btu/h may meet 90% Et requirements via an input capacity-weighted average.*
[2] *FOOTNOTE: Compliant equipment may be found in the Modernized Appliance Efficiency Database System (MAEDBS) on the Energy Commission website: https://cacertappliances.energy.ca.gov/Pages/Search/AdvancedSearch.aspx*

Water Heating Equipment All Occupancies

	Yes	No	Not Applicable	Requirement
18	☐	☐	☒	Unfired storage tank insulation shall have Internal + External >=R-16 OR External >=R-3.5. Label required per 110.3(c)3
19	☐	☐	☒	New state buildings 60% of energy for service water heating from site solar energy or recovered energy per 110.3(c)5
20	☒	☐	☐	Isolation valves for instantaneous water heater with input rating >6.8 kBTUH or 2 kW has been specified per 110.3(c)6
21	☐	☐	☒	School buildings < 25,000 ft^2 and < 4 stories must install a heat pump water heating system per 140.5(a)1. Water heating systems serving an individual bathroom space may be an instantaneous electric water heater.

STATE OF CALIFORNIA

Domestic Water Heating System

CALIFORNIA ENERGY COMMISSION

CERTIFICATE OF COMPLIANCE		NRCC-PLB-E
Project Name: KONA ISLAND COFFEE	Report Page:	(Page 4 of 7)
	Date Prepared:	2025-07-23T07:58:00-04:00

G. DOMESTIC HOT WATER DISTRIBUTION SYSTEM

This table is used to demonstrate compliance for nonresidential occupancies with distribution requirements in 120.3 and 140.5. For multifamily and hotel/motel occupancies, compliance is demonstrated with requirements 110.3(c), 160.4, 170.2(d).

Mandatory Pipe Insulation All Occupancies

13	☐	For systems serving dwelling units, pipe insulation must meet the minimum insulation requirements in Table 160.4-A (see blow) except: • Piping that penetrates framing members shall not be required to have pipe insulation for the distance of the framing penetration. Piping that penetrates metal framing shall use grommets, plugs, wrapping or other insulating material to assure that no contact is made with the metal framing. Insulation shall abut securely against all framing members • Piping installed in interior or exterior walls shall not be required to have pipe insulation if all of the requirements are met for compliance with Quality Insulation Installation (QII) as specified in the Reference Residential Appendix RA3.5. • Piping surrounded with a minimum of 1 inch of wall insulation, 2 inches of crawlspace insulation, or 4 inches of attic insulation, shall not be required to have pipe insulation.
14	☐	For systems serving nonresidential spaces, pipe insulation for the following applications is specified to comply with Table 120.3-A (see below) per 120.3: • Recirculating system piping, including supply and return piping of the water heater • The first 8 ft of hot and cold outlet piping, including between storage tank and heat trap, for a nonrecirculating storage system • Pipes that are externally heated
15	☒	Insulation shall be protected from damage, including that due to sunlight, moisture, equipment maintenance, and wind. Insulation exposed to weather shall be installed with a cover suitable for outdoor service per 120.3(b) / 160.4(f). Pipe insulation buried below grade must be installed in a water proof and non-crushable casing or sleeve.

TABLE 120.3-A / 160.4-A PIPE INSULATION THICKNESS

Fluid Temperature Range (°F)	Conductivity Range (Btu-in per hour per ft^2 per °F)	Insulation Mean Rating Temp (°F)	Nominal Pipe Diameter (in)			
			< 1	1 to < 1.5	1.5 to < 4	1.5 to < 4 Multifamily & Hotel/Motel
			Minimum Insulation Required			
105-140	0.22 - 0.28	100	1.0 in or R-7.7	1.5 in or R-12.5	1.5 in or R-11	2.0 in or R-16

STATE OF CALIFORNIA

Domestic Water Heating System

CALIFORNIA ENERGY COMMISSION

CERTIFICATE OF COMPLIANCE		NRCC-PLB-E
Project Name: KONA ISLAND COFFEE	Report Page:	(Page 5 of 7)
	Date Prepared:	2025-07-23T07:58:00-04:00

H. DOMESTIC HOT WATER CONTROLS

This table is used to demonstrate compliance with control requirements in 110.3 for all occupancies. For multifamily residential and hotel/motel occupancies, compliance is also demonstrated with requirements in 160.4(e) / 170.2(d).

	Yes	No	Not Applicable	Requirement
01	☒	☐	☐	Construction documents require manufacturer certification that service water-heating systems are equipped with automatic temperature controls capable of adjusting temperature settings per 110.3(a).
02	☐	☐	☒	Systems with capacity > 167,000 BTUH equipped with outlet temperature controls per 110.3(c)1 unless covered by California Plumbing Code 613.0.
03	☒	☐	☐	Controls for circulating pumps or electrical heat trace systems are capable of automatically turning off the system per §110.3(c)2 unless systems serves healthcare facility.
04	☐	☐	☒	For recirculation systems serving multiple dwelling units, design includes automatic pump controls per 170.2(d) or 180.1(b)3 for additions.
05	☐	☐	☒	For recirculation systems serving individual dwelling units, design includes manual on/off controls as specified in Reference Appendix RA4.4.9 per 170.2(d).
06	☐	☐	☒	Combustion air positive shut-off shall be provided per 160.4(3).on all newly installed commercial boilers as follows: • Boilers with input capacity >= 2.5 MMBtu/h, in which the boiler is designed to operate with a nonpositive vent static pressure • Boilers where one stack serves two or more boilers with a total combined input capacity per stack of 2.5 MMBtu/h.
07	☐	☐	☒	Boiler combustion air fans with motor >= 10 hp shall meet one of the following • The fan motor shall be driven by a variable speed drive OR • The fan motor shall include controls that limit the fan motor demand to <=30% of the total design wattage at 50% of the design air volume.
08	☐	☐	☒	Newly installed boilers with an input capacity (d:gte/) 5MMBtu/h and a steady state full-load combustion efficiency < 90% shall maintain excess (stack gas) oxygen concentrations <= 5% by volume on a dry basis over firing rates of 20-100%. Combustion air volume shall be controlled with respect to firing rate or flue gas oxygen concentration. Use of a common gas and combustion air control linkage or jack shaft is prohibited.

STATE OF CALIFORNIA

Domestic Water Heating System

CALIFORNIA ENERGY COMMISSION

CERTIFICATE OF COMPLIANCE		NRCC-PLB-E
Project Name: KONA ISLAND COFFEE	Report Page:	(Page 6 of 7)
	Date Prepared:	2025-07-23T07:58:00-04:00

I. DECLARATION OF REQUIRED CERTIFICATES OF INSTALLATION

Selections have been made based on information provided in this document. If any selection have been changed by permit applicant, an explanation should be included in Table E. Additional Remarks. These documents must be provided to the building inspector during construction and can be found online

Form/Title
NRCI-PLB-E - Must be submitted for all buildings

J. DECLARATION OF REQUIRED CERTIFICATES OF ACCEPTANCE

There are no forms required for this project.

K. DECLARATION OF REQUIRED CERTIFICATES OF VERIFICATION

There are no forms required for this project.

STATE OF CALIFORNIA

Domestic Water Heating System

CALIFORNIA ENERGY COMMISSION

CERTIFICATE OF COMPLIANCE		NRCC-PLB-E
Project Name: KONA ISLAND COFFEE	Report Page:	(Page 7 of 7)
Project Address: 2565 California St. # 84 Mountain View Ca. 94040	Date Prepared:	2025-07-23T07:58:00-04:00

DOCUMENTATION AUTHOR'S DECLARATION STATEMENT

I certify that this Certificate of Compliance documentation is accurate and complete.

Documentation Author Name: MICHAEL TOBIAS	Documentation Author Signature:
Company: NY ENGINEERS	Signature Date: 07/23/2025
Address: 382 NE 191 ST, SUITE 49674	CEA/ HERS Certification Identification (if applicable):
City/State/Zip: MIAMI, FLORIDA 33179	Phone:

RESPONSIBLE PERSON'S DECLARATION STATEMENT

I certify the following under penalty of perjury, under the laws of the State of California:

1. The information provided on this Certificate of Compliance is true and correct.
2. I am eligible under Division 3 of the Business and Professions Code to accept responsibility for the building design or system design identified on this Certificate of Compliance (responsible designer)
3. The energy features and performance specifications, materials, components, and manufactured devices for the building design or system design identified on this Certificate of Compliance conform to the requirements of Title 24, Part 1 and Part 6 of the California Code of Regulations.
4. The building design features or system design features identified on this Certificate of Compliance are consistent with the information provided on other applicable compliance documents, worksheets, calculations, plans and specifications submitted to the enforcement agency for approval with this building permit application.
5. I will ensure that a completed signed copy of this Certificate of Compliance shall be made available with the building permit(s) issued for the building, and made available to the enforcement agency for all applicable inspections. I understand that a completed signed copy of this Certificate of Compliance is required to be included with the documentation the builder provides to the building owner at occupancy.

Responsible Designer Name: MICHAEL TOBIAS	Responsible Designer Signature:
Company: NY ENGINEERS	Date Signed: 07/23/2025
Address: 382 NE 191 ST, SUITE 49674	License: M33750
City/State/Zip: MIAMI, FLORIDA 33179	Phone:

Property of NY Engineers

DESIGN PROFESSIONAL
NY ENGINEERS
382 NE 191st Street Suite 49674
MIAMI, FL 33179
(786)-788-0295
ny-engineers.com

DATES

PROJECT

TITLE

TITLE 24

SHEET NO.

P4.0