# MECHANICAL SYMBOLS LIST

| | |
|---|---|
| AC-1 TXF-1 | EQUIPMENT SYMBOL |
| **AIR DEVICES** | |
| ⊠ ⊠ | CEILING DIFFUSER SUPPLY |
| ⧄ ⧄ | CEILING DIFFUSER RETURN |
| **DUCT ACCESSORIES** | |
| VD VD | VOLUME DAMPER W/ ACCESS DOOR |
| **CONTROLS AND SENSORS** | |
| (T) | THERMOSTAT |
| (S) | SWITCH |
| **DUCTWORK** | |
| ======= | AIR DUCT W/ 1.5" ACOUSTICAL LINING |
| ~∿∿~ | FLEXIBLE DUCT |
| FC FC | FLEXIBLE CONNECTION |
| 24X12 | RECTANGULAR DUCT (WIDTH X DEPTH) |
| ⊠ | SUPPLY AIR RECTANGULAR DUCT CROSS SECTION |
| ⧄ | RETURN AIR RECTANGULAR DUCT CROSS SECTION |
| ø12 | ROUND DUCT (DIAMETER) |
| ⊘ | ROUND DUCT CROSS SECTION |

## ABBREVIATIONS

| | |
|---|---|
| AC | AIR CURTAIN |
| ACCU | CONDENSING UNIT |
| AHU | AIR HANDLING UNIT |
| AL | ACOUSTIC LINING |
| BD | BACKDRAFT DAMPER |
| CDS | CEILING DIFFUSER SUPPLY |
| CDR | CEILING DIFFUSER RETURN |
| CFM | CUBIC FEET OF AIR PER MINUTE |
| DN | DOWN |
| EER | ENERGY EFFICIENCY RATIO |
| EF | TOILET EXHAUST FAN |
| EG | EXHAUST AIR TERMINAL |
| FC | FLEXIBLE CONNECTION |
| KEF | KITCHEN EXHAUST FAN |
| IEER | INTEGRATED ENERGY EFFICIENCY RATIO |
| RG | RETRUN AIR TERMINAL |
| RTU | ROOF TOP UNIT |
| SG | SUPPLY AIR TERMINAL |
| S.A.E. | SAME AS EXISTING |
| VD | VOLUME DAMPER |
| V.I.F. | VERIFY IN FEILD |

## MECHANICAL DRAWING LIST

| | |
|---|---|
| M0.1 | MECHANICAL GENERAL NOTES, SYMBOLS LIST & ABBREVIATIONS |
| M0.2 | MECHANICAL SPECIFICATIONS |
| M2.0 | MECHANICAL FLOOR PLAN |
| M2.1 | MECHANICAL ROOF PLAN & THERMOSTATIC NOTES |
| M3.0 | MECHANICAL DETAILS (1 OF 2) |
| M3.1 | MECHANICAL DETAILS (2 OF 2) |
| M6.0 | MECHANICAL SCHEDULES |
| H1.0 | HOOD DETAILS (1 OF 3) |
| H1.1 | HOOD DETAILS (2 OF 3) |
| H1.2 | HOOD DETAILS (3 OF 3) |

## CHICAGO BUILDING DEPARTMENT NOTES

ALL WORK SHALL COMPLY WITH APPLICABLE SECTIONS OF CHICAGO BUILDING CODE 2019 AND ALL AMENDMENTS AND RULES AND REGULATIONS OF THE DEPARTMENT OF BUILDINGS TO DATE.

1. THE CONTRACTOR SHALL ENGAGE THE THE SERVICES OF A PROFESSIONAL ENGINEER TO PROVIDE THE REQUIRED SPECIAL INSPECTIONS AND TESTS.
2. THE LICENSED PROFESSIONAL ENGINEER, ARCHITECT OR OTHER PERSON HAVING NOT LESS THAN FIVE (5) YEARS EXPERIENCE SUPERVISING THE INSTALLATION OF SUCH MECHANICAL SYSTEMS AND CONDUCTING SUCH TESTS WILL FILE DOCUMENTATION AND REPORTS OF TESTS THAT THE SYSTEM COMPLIES WITH THE CONSTRUCTION DOCUMENTS AND APPLICABLE LAWS.
3. TESTS OF MECHANICAL SYSTEMS SHALL BE PERFORMED IN ACCORDANCE WITH THE FOLLOWING SECTIONS OF THE INTERIM CHICAGO MECHANICAL CODE (TITLE 14M):
   A. VENTILATION SYSTEM BALANCING MC 18–28–510.5..
4. THE FOLLOWING WORK ITEMS, COMPONENTS, MATERIALS, CAPACITIES, ETC. SHALL COMPLY WITH THE REFERENCED CODE OR STANDARD:
   A. DUCT CONSTRUCTION AND INSTALLATION– 18–28–601.
   B. AIR INTAKES, EXHAUSTS AND RELIEF – MC 18–28–401.5.
   C. AIR FILTER – 18–28–403.3.5.
   D. SMOKE DETECTORS AND FIRE AND SMOKE DAMPERS – 18–28–606 & 18–28–607 RESPECTIVELY.
   E. GAS FIRED EQUIPMENT – INTERIM CHICAGO FUEL GAS CODE.
5. MINIMUM TEMPERATURE TO BE MAINTAINED IN OCCUPIED SPACES DURING HEATING SEASON: 68 DEG. FAHRENHEIT.
6. A STATEMENT SHALL BE FILED BY THE OWNER OR TENANT IN POSSESSION THAT THE VENTILATION SYSTEM WILL BE KEPT IN CONTINUOUS OPERATION AT ALL TIMES DURING THE NORMAL OCCUPANCY OF THE STRUCTURE AS REQUIRED BY MC 18–28–401.
7. THESE PLANS ARE APPROVED ONLY FOR THE WORK INDICATED ON THE APPLICATION SPECIFICATION SHEET. ALL OTHER MATTERS SHOWN ARE NOT TO BE RELIED UPON OR TO BE CONSIDERED AS EITHER BEING APPROVED OR IN ACCORDANCE WITH APPLICABLE CODES.
8. A FINAL REPORT OF TEST PROCEDURES AND RESULTS IDENTIFIED AS "FINAL COMMISSIONING REPORT" SHALL BE DELIVERED TO THE BUILDING OWNER OR OWNER'S AUTHORIZED AGENT. THE REPORT SHALL BE ORGANIZED WITH MECHANICAL SYSTEM AND SERVICE HOT WATER SYSTEM FINDINGS IN SEPARATE SECTIONS TO ALLOW INDEPENDENT REVIEW.
9. A WRITTEN REPORT DESCRIBING THE ACTIVITIES AND MEASUREMENTS COMPLETED IN ACCORDANCE WITH SECTION IECC 2021 C408.2.5.2.
10. ALL HEATING AND COOLING LOADS CALCULATED PER ASHRAE/ACCA 183.
11. THESE PLANS ARE APPROVED ONLY FOR THE WORK INDICATED ON THE APPLICATION SPECIFICATION SHEET. ALL OTHER MATTERS SHOWN ARE NOT TO BE RELIED UPON OR TO BE CONSIDERED AS EITHER BEING APPROVED OR IN ACCORDANCE WITH APPLICABLE CODES.

## GENERAL NOTES

1. CONTRACTOR SHALL SURVEY THE AREA OF THIS WORK BEFORE SUBMITTING A BID AND SHALL BE RESPONSIBLE FOR NOTIFYING THE ARCHITECT OF ANY CONDITIONS WHICH WOULD PREVENT THE INSTALLATION OF THE WORK AS SHOWN ON DRAWINGS.
2. ALL APPLICABLE CODES, LAWS AND REGULATIONS GOVERNING OR RELATING TO ANY PORTION OF THIS WORK ARE HEREBY INCORPORATED INTO AND MADE A PART OF THESE SPECIFICATIONS, AND THEIR PROVISIONS SHALL BE CARRIED OUT BY THE CONTRACTOR WHO SHALL INFORM THE OWNER, PRIOR TO SUBMITTING A PROPOSAL, OF ANY WORK OR MATERIALS WHICH VIOLATE ANY OF THE ABOVE LAWS AND REGULATIONS. ANY WORK DONE BY THE CONTRACTOR CAUSING SUCH VIOLATION SHALL BE CORRECTED BY THE CONTRACTOR.
3. BEFORE PROCEEDING WITH ANY WORK IN OCCUPIED OR USED AREAS, THE CONTRACTOR SHALL APPLY TO OWNER FOR PERMISSION TO ENTER SUCH AREAS. THE CONTRACTOR IS OBLIGED TO PERFORM HIS WORK ONLY AT THE TIMES DESIGNATED BY OWNER. THERE WILL BE NO ADDITIONAL COMPENSATION FOR THE WORK PERFORMED AFTER HOURS OR ON OFF–DAYS WITHOUT PRIOR WRITTEN APPROVAL.
4. THE WORK IN THE BUILDING SHALL BE DONE WHEN AND AS DIRECTED, AND IN A MANNER SATISFACTORY TO THE OWNER. THE WORK SHALL BE PERFORMED SO AS TO CAUSE THE LEAST POSSIBLE INCONVENIENCE AND DISTURBANCE TO THE PRESENT OCCUPANTS.
5. THE CONTRACTOR'S PROPOSAL FOR ALL WORK SHALL BE PREDICATED ON THE PERFORMANCE OF THE WORK DURING REGULAR WORKING HOURS. WHEN SO DIRECTED, HOWEVER, THE CONTRACTOR SHALL INSTALL WORK IN OVERTIME AND THE ADDITIONAL COST TO BE CHARGED THEREFORE SHALL BE ONLY THE "PREMIUM" PORTION OF THE WAGES PAID.
6. CONTRACTOR SHALL ASCERTAIN THE APPROPRIATE METHOD FOR BRINGING THE UNITS INTO AND THROUGH THE BUILDING TO POSITION UNIT IN LOCATION SHOWN ON THE PLANS. WHERE NECESSARY, EQUIPMENT SHALL BE SHIPPED FROM MANUFACTURER IN SECTIONS OF SIZE SUITABLE FOR MOVING THROUGH RESTRICTIVE SPACES. COORDINATE WITH BUILDING OWNER APPROPRIATE TIMES OF DAY SUCH EQUIPMENT MAY BE MOVED THROUGH ALL AREAS.
7. REMOVAL AND RELOCATION OF CERTAIN EXISTING WORK WILL BE NECESSARY FOR THE PERFORMANCE OF THE GENERAL WORK. ALL EXISTING CONDITIONS CANNOT BE COMPLETELY DETAILED ON THE DRAWINGS. THE CONTRACTOR SHALL SURVEY THE SITE AND INCLUDE ALL CHANGES IN MAKING UP THE WORK PROPOSAL.
8. DISCONNECT, REMOVE AND/OR RELOCATE EXISTING MATERIAL, EQUIPMENT AND OTHER WORK AS NOTED OR REQUIRED FOR PROPER INSTALLATION OF NEW SYSTEM.
9. CONNECT NEW WORK TO EXISTING WORK IN NEAT AND APPROVED MANNER. RESTORE EXISTING WORK DISTURBED WHILE INSTALLING NEW WORK TO ACCEPTABLE CONDITION AS DETERMINED BY ARCHITECT.
10. PLAN INSTALLATION OF NEW WORK AND CONNECTIONS TO EXISTING WORK TO INSURE MINIMUM INTERFERENCE WITH REGULAR OPERATION OF EXISTING FACILITIES. ALL SYSTEM SHUTDOWNS AFFECTING OTHER AREAS SHALL BE COORDINATED WITH BUILDING OWNER. INSTALL ISOLATION VALVES AT POINT OF CONNECTION TO THE EXISTING PIPING. PROVIDE TEMPORARY DUCT CAPS AND/OR CONNECTIONS TO MINIMIZE SHUTDOWN TIME.
11. SUPPORT ALL DUCTWORK AND PIPING FROM BUILDING STRUCTURE AND/OR FRAMING IN AN APPROVED MANNER. WHERE OVERHEAD CONSTRUCTION DOES NOT PERMIT FASTENING OR SUPPORTS FOR EQUIPMENT, FURNISH ADDITIONAL FRAMING. INSERTS SHALL BE STEEL, SLOTTED TYPE AND FACTORY PAINTED. SINGLE ROD SHALL BE SIMILAR TO GRINNELL FIG. 281. MULTI–ROD SHALL BE SIMILAR TO FEE & MASON SERIES 9000 WITH END CAPS AND CLOSURE STRIPS. MAXIMUM LOADING INCLUDING PIPES, DUCTWORK CONTENTS AND COVERING SHALL NOT EXCEED 75% OF RATED INSERT CAPABILITY. WHEN SUPPORTING FROM BUILDING USE BEAM CLAMPS IN APPROVED MANNER.
12. PROVIDE ALL NECESSARY FLASHING AND COUNTER FLASHING TO MAINTAIN THE WATERPROOFING INTEGRITY OF THIS BUILDING AS REQUIRED BY THE INSTALLATION OR REMOVAL OF PIPES, DUCTS, LOUVERS, CONDUIT, AND EQUIPMENT. PROVIDE EQUIPMENT CURBS AND DUNNAGE STEEL AS REQUIRED.
13. SEAL OPENINGS AROUND DUCTS AND PIPING THROUGH PARTITIONS, WALLS AND FLOORS (NOT IN SHAFTS) WITH MINERAL WOOL OR OTHER NONCOMBUSTIBLE MATERIAL (FIBERGLASS INSULATION IS NOT ACCEPTABLE).
14. WHERE PENETRATIONS THROUGH FIRE RATED WALLS ARE NOT FIRE PROOFED THIS CONTRACTOR SHALL BE RESPONSIBLE TO SEAL SAME TO MAINTAIN THE RATED INTEGRITY.
15. INSTALL WORK SO AS TO BE READILY ACCESSIBLE FOR OPERATION, MAINTENANCE AND REPAIR. MINOR DEVIATIONS FROM DRAWINGS MAY BE MADE TO ACCOMPLISH THIS, BUT CHANGES WHICH INVOLVE EXTRA COST SHALL NOT BE MADE WITHOUT APPROVAL.
16. ACCESS DOORS ARE REQUIRED FOR ALL BUILDING SERVICE VALVES THAT RUN THROUGH THE SPACE, AND ACCESS DOOR SHALL HAVE THE EQUAL RATED CAPACITY (1HR, 2HR, ETC.) AS WALL. COORDINATE ALL LOCATIONS OF ACCESS DOORS WITH THE ARCHITECT.
17. REMOVABLE ACCESS TILE AND/OR ACCESS DOOR ARE REQUIRED IN HUNG CEILINGS, SHAFTS AND WALLS FOR ALL VOLUME AND FIRE DAMPERS, AUTOMATIC DAMPERS AND ALL OTHER MECHANICAL EQUIPMENT AND DEVICES. HVAC CONTRACTOR TO FURNISH ACCESS LOCATION REQUIREMENTS TO GENERAL CONTRACTOR. ACCESS TILE IDENTIFICATION: PROVIDE BUTTONS, TABS, AND MARKERS TO IDENTIFY LOCATION OF CONCEALED VALVES, DAMPERS AND EQUIPMENT.
18. THE CONTRACTOR SHALL KEEP ALL EQUIPMENT AND MATERIALS, AND ALL PARTS OF THE BUILDING, EXTERIOR SPACES AND ADJACENT STREETS, SIDEWALKS AND PAVEMENTS, FREE FROM MATERIAL AND DEBRIS RESULTING FROM THE EXECUTION OF THIS WORK. EXCESS MATERIALS WILL NOT BE PERMITTED TO ACCUMULATE EITHER ON THE INTERIOR OR THE EXTERIOR.
19. UNLESS OTHERWISE SPECIFICALLY SPECIFIED, INCLUDE ALL CUTTING AND PATCHING OF EXISTING FLOORS, WALLS, PARTITIONS AND OTHER MATERIALS IN THE EXISTING BUILDING. THE CONTRACTOR SHALL RESTORE THESE AREAS TO ORIGINAL CONDITION.
20. MATERIALS AND WORKMANSHIP, UNLESS OTHERWISE NOTED, SHALL BE IN ACCORDANCE WITH BUILDING STANDARDS.
21. ALL EQUIPMENT SHALL BE PROVIDED WITH ONE YEAR WARRANTY PARTS AND LABOR AND FIVE YEARS ON COMPRESSORS. WARRANTY PERIOD BEGINS UPON PROJECT ACCEPTANCE
22. ALL MATERIAL AND EQUIPMENT TO BE NEW UNLESS OTHERWISE NOTED AND SHALL BE IN ACCORDANCE WITH BUILDING STANDARDS.
23. THE CONTRACTOR SHALL BE RESPONSIBLE FOR HIS WORK WITH ITS COMPLETION AND FINAL ACCEPTANCE AND SHALL REPLACE ANY OF THE SAME WHICH MAY BE DAMAGED, LOST, OR STOLEN WITHOUT ADDITIONAL COST TO THE OWNER.
24. THE CONTRACTOR SHALL BE RESPONSIBLE FOR THE FAILURE OF ANY DUCTWORK SYSTEM OR EQUIPMENT TO FUNCTION PROPERLY UPON COMPLETION OF HIS WORK UPON SAID SYSTEM OR EQUIPMENT.
25. SUBMIT SHOP DRAWING OF ALL WORK WHICH MUST BE APPROVED BY THE ARCHITECT AND ENGINEER BEFORE WORK COMMENCES.
26. ALL MATERIAL AND EQUIPMENT TO BE NEW UNLESS OTHERWISE NOTED AND SHALL BE IN ACCORDANCE WITH BUILDING STANDARDS.
27. SUBMISSION OF A PROPOSAL SHALL BE CONSTRUED AS EVIDENCE THAT A CAREFUL EXAMINATION OF THE PORTIONS OF THE EXISTING BUILDING, EQUIPMENT, ETC., WHICH AFFECT THIS WORK, AND THE ACCESS TO SUCH SPACES, HAS BEEN MADE AND THAT THE CONTRACTOR IS FAMILIAR WITH EXISTING CONDITIONS AND DIFFICULTIES THAT WILL AFFECT THE EXECUTION OF THE WORK. LATER CLAIMS SHALL NOT BE MADE FOR LABOR, EQUIPMENT OR MATERIALS REQUIRED BECAUSE OF DIFFICULTIES ENCOUNTERED WHICH COULD HAVE BEEN FORESEEN DURING SUCH AN EXAMINATION. THE ON–SITE INSPECTION SHALL VERIFY EXISTING DUCTWORK, PIPING (SIZES, CLEARANCES, ETC) AND CONDITIONS.
28. INSURANCE: IN ACCORDANCE WITH BUILDING REQUIREMENTS THE CONTRACTOR SHALL INCLUDE A HOLD HARMLESS CLAUSE FOR OWNER AND ENGINEER.
29. THE FINAL ACCEPTANCE WILL BE MADE AFTER THE CONTRACTOR HAS ADJUSTED HIS EQUIPMENT, BALANCED THE VARIOUS SYSTEMS, DEMONSTRATED THAT IT FULFILLS THE REQUIREMENTS OF THE DRAWINGS AND SPECIFICATIONS AND HAS FURNISHED ALL THE REQUIRED CERTIFICATES OF INSPECTION AND APPROVAL.
30. SPECIFICATIONS ARE OF SIMPLIFIED FORM AND INCLUDE INCOMPLETE SENTENCES. WORDS OR PHRASES SUCH AS "THE CONTRACTOR SHALL," "SHALL BE," "FURNISH," "PROVIDE," "A," "THE," AND "ALL" HAVE BEEN OMITTED FOR BREVITY.
31. WHERE A CONFLICT EXISTS BETWEEN THE DRAWINGS, THE SPECIFICATIONS OR ANY OTHER CONSTRUCTION DOCUMENT, THE ONE WITH THE MOST STRINGENT REQUIREMENT(S) SHALL APPLY.

DEFINITIONS:

1) "PROVIDE": TO SUPPLY, INSTALL AND CONNECT UP COMPLETE AND READY FOR SAFE AND REGULAR OPERATION THE PARTICULAR WORK REFERRED TO UNLESS SPECIFICALLY OTHERWISE NOTED.
2) "INSTALL": TO ERECT, MOUNT AND CONNECT COMPLETE WITH RELATED ACCESSORIES.
3) "FURNISH" OR "SUPPLY": TO PURCHASE, PROCURE, ACQUIRE AND DELIVER COMPLETE WITH RELATED ACCESSORIES.

## SCOPE OF WORK

SCOPE OF WORK

1. THE WORK UNDER CONTRACT INCLUDES ALL LABOR, MATERIALS AND APPLIANCES NECESSARY FOR THE FURNISHING, INSTALLING AND TESTING, COMPLETE AND READY FOR SAFE OPERATION OF THE SYSTEMS AS DESCRIBED IN THE SPECIFICATIONS, FLOOR PLAN(S) DESIGN, DETAIL DRAWINGS, NOTES, RFI'S, ETC. FOR THIS PROJECT. WORK SHALL BE INSTALLED IN A NEAT, WORKMANLIKE MANNER.
2. THE CONTRACTOR SHALL GIVE NECESSARY NOTICE, FILE DRAWINGS AND SPECIFICATIONS WITH THE DEPARTMENT HAVING JURISDICTION, OBTAIN PERMITS OR LICENSES NECESSARY TO CARRY OUT THIS WORK AND PAY ALL FEES THEREFORE. THE CONTRACTOR SHALL ARRANGE FOR INSPECTION AND TESTS OF ANY OR ALL PARTS OF THE WORK IF SO REQUIRED BY AUTHORITIES AND PAY ALL CHARGES FOR SAME. THE CONTRACTOR SHALL PAY ALL COSTS FOR, AND FURNISH TO THE OWNER BEFORE FINAL BILLING, ALL CERTIFICATES NECESSARY AS EVIDENCE THAT THE WORK INSTALLED CONFORMS WITH ALL REGULATIONS WHERE THEY APPLY TO THIS WORK.
3. THE CONTRACTOR SHALL FURNISH A WRITTEN GUARANTEE TO REPLACE OR REPAIR PROMPTLY AND ASSUME RESPONSIBILITY FOR ALL EXPENSES INCURRED FOR ANY WORKMANSHIP AND EQUIPMENT IN WHICH DEFECTS DEVELOP WITHIN ONE YEAR FROM THE DATE OF FINAL CERTIFICATE FOR PAYMENT AND/OR FROM DATE OR ACTUAL USE OF EQUIPMENT OR OCCUPANCY OF SPACES, BY OWNER, INCLUDED UNDER THE VARIOUS PARTS OF THE WORK, WHICHEVER DATE IS EARLIER. THIS WORK SHALL BE DONE AS DIRECTED BY THE OWNER. THIS GUARANTEE SHALL ALSO PROVIDE THAT WHERE DEFECTS OCCUR, THE CONTRACTOR WILL ASSUME RESPONSIBILITY FOR ALL EXPENSES INCURRED IN REPAIRING AND REPLACING WORK OF OTHER TRADES AFFECTED BY DEFECTS, REPAIRS OR REPLACEMENTS IN EQUIPMENT SUPPLIED BY THE CONTRACTOR.

## GENERAL HVAC NOTES

GENERAL:

1. PROVIDE ALL MATERIAL AND EQUIPMENT AND PERFORM ALL LABOR REQUIRED TO INSTALL COMPLETE AND OPERABLE MECHANICAL SYSTEMS AS INDICATED ON THE DRAWINGS, AS SPECIFIED AND AS REQUIRED BY CODE.
2. CONTRACT DOCUMENT DRAWINGS FOR MECHANICAL WORK (HVAC, PLUMBING, AND FIRE PROTECTION) ARE DIAGRAMMATIC AND ARE INTENDED TO CONVEY SCOPE AND GENERAL ARRANGEMENT ONLY.
3. THE LOCATIONS OF ALL ITEMS SHOWN ON THE DRAWINGS OR CALLED FOR IN THE SPECIFICATIONS THAT ARE NOT FIXED BY DIMENSIONS ARE APPROXIMATE ONLY. THE EXACT LOCATIONS NECESSARY TO SECURE THE BEST CONDITIONS AND RESULTS MUST BE DETERMINED BY THE PROJECT SITE CONDITIONS AND SHALL HAVE THE APPROVAL OF THE ENGINEER BEFORE BEING INSTALLED. DO NOT SCALE DRAWINGS.
4. WHEN MECHANICAL WORK (HVAC, PLUMBING, SHEET METAL, FIRE PROTECTION, ETC.) IS SUBCONTRACTED, IT SHALL BE THE MECHANICAL CONTRACTOR'S RESPONSIBILITY TO COORDINATE SUBCONTRACTORS AND THE ASSOCIATED CONTRACTS. WHEN DISCREPANCIES ARISE PERTAINING TO WHICH CONTRACTOR PROVIDES A PARTICULAR ITEM OF THE MECHANICAL CONTRACT OR WHICH CONTRACTOR PROVIDES FINAL CONNECTIONS FOR A PARTICULAR ITEM OF THE MECHANICAL CONTRACT, IT SHALL BE BROUGHT TO THE ATTENTION OF THE MECHANICAL CONTRACTOR, WHOSE DECISION SHALL BE FINAL.
5. COORDINATE CONSTRUCTION OF ALL MECHANICAL WORK WITH ARCHITECTURAL, STRUCTURAL, CIVIL, ELECTRICAL WORK, ETC., SHOWN ON OTHER CONTRACT DOCUMENT DRAWINGS.
6. INSTALL ALL MECHANICAL EQUIPMENT AND APPURTENANCES IN ACCORDANCE WITH MANUFACTURER'S RECOMMENDATIONS, CONTRACT DOCUMENTS, AND APPLICABLE CODES AND REGULATIONS.
7. WHERE TWO OR MORE ITEMS OF THE SAME TYPE OF EQUIPMENT ARE REQUIRED, THE PRODUCT OF ONE MANUFACTURER SHALL BE USED.
8. COORDINATE ALL EQUIPMENT CONNECTIONS WITH MANUFACTURERS' CERTIFIED DRAWINGS. COORDINATE AND PROVIDE ALL DUCT AND PIPING TRANSITIONS REQUIRED FOR FINAL EQUIPMENT CONNECTIONS TO FURNISHED EQUIPMENT. FIELD VERIFY AND COORDINATE ALL DUCT AND PIPING DIMENSIONS BEFORE FABRICATION.
9. ALL CONTROL WIRE AND CONDUIT SHALL COMPLY WITH THE NATIONAL ELECTRIC CODE AND ELECTRICAL DIVISION OF THE SPECIFICATION.
10. PROVIDE VIBRATION ISOLATION FOR ALL MECHANICAL EQUIPMENT TO PREVENT TRANSMISSION OF VIBRATION TO BUILDING STRUCTURE.
11. LOCATE ALL TEMPERATURE, AND FLOW MEASURING DEVICES IN ACCESSIBLE LOCATIONS WITH THE STRAIGHT SECTION OF PIPE OR DUCT UP– AND DOWNSTREAM AS RECOMMENDED BY THE MANUFACTURER FOR GOOD ACCURACY.
12. WHERE BEAMS ARE INDICATED TO BE PENETRATED WITH DUCTWORK OR PIPING, COORDINATE DUCTWORK AND PIPING LAYOUT WITH BEAM OPENING SIZE AND OPENING LOCATIONS. COORDINATION SHALL BE DONE PRIOR TO THE FABRICATION OF DUCTWORK, CUTTING OF PIPING, OR FABRICATION OF BEAMS.
13. ALL MISCELLANEOUS STEEL REQUIRED TO ENSURE PROPER INSTALLATION AND AS SHOWN IN THE DETAILS FOR DUCTWORK, AND EQUIPMENT (UNLESS OTHERWISE NOTED) SHALL BE FURNISHED AND INSTALLED BY THE MECHANICAL CONTRACTOR.
14. PROVIDE ACCESS PANELS FOR INSTALLATION IN WALLS AND CEILINGS, WHERE REQUIRED, TO SERVICE DAMPERS, VALVES, SMOKE DETECTORS, AND OTHER CONCEALED MECHANICAL EQUIPMENT. ACCESS PANELS SHALL BE TURNED OVER TO THE GENERAL CONTRACTOR FOR INSTALLATION. ACCESS PANELS SHALL HAVE THE EQUAL RATED CAPACITY (1HR, 2HR, ETC.) AS WALL.
15. MECHANICAL EQUIPMENT, DUCTWORK, AND PIPING SHALL NOT BE SUPPORTED FROM A METAL DECK.
16. ALL EQUIPMENT, PIPING, DUCTWORK, ETC., SHALL BE SUPPORTED AS DETAILED, SPECIFIED AND REQUIRED TO PROVIDE A VIBRATION–FREE INSTALLATION.
17. ALL DUCTWORK, PIPING, AND EQUIPMENT SUPPORTED FROM STRUCTURAL STEEL SHALL BE COORDINATED WITH THE GENERAL CONTRACTOR. ALL ATTACHMENTS TO STEEL BAR JOISTS, TRUSSES, OR JOIST GIRDERS SHALL BE AT PANEL POINTS. PROVIDE BEAM CLAMPS MEETING MSS STANDARDS. WELDING TO STRUCTURAL MEMBERS SHALL NOT BE PERMITTED. THE USE OF C–CLAMPS SHALL NOT BE PERMITTED.
18. LOCATIONS AND SIZES OF ALL FLOOR, WALL, AND ROOF OPENINGS SHALL BE COORDINATED WITH ALL OTHER TRADES INVOLVED.
19. ALL OPENINGS IN FIRE WALLS DUE TO DUCTWORK, PIPING, CONDUIT, ETC., SHALL BE FIRE STOPPED WITH A PRODUCT SIMILAR TO 3M OR APPROVED EQUAL.
20. ALL CONDENSATE DRAIN LINES FROM EACH ROOF TOP UNIT SHALL BE PIPED FULL SIZE OF THE UNIT DRAIN OUTLET, WITH "P" TRAP, AND PIPED TO THE NEAREST DRAIN OR GUTTER OR DOWN SPOUT PROVIDED THAT DOWNSPOUT DOES NOT DISCHARGE ONTO PAVEMENT. SEE THE DETAILS SHOWN IN THE DRAWINGS OR THE CONTRACT SPECIFICATIONS FOR THE DEPTH OF THE AIR CONDITIONING CONDENSATE TRAP.
21. REFER TO TYPICAL DETAILS FOR DUCTWORK, PIPING, AND EQUIPMENT INSTALLATION.
22. ALL TESTS SHALL BE COMPLETED BEFORE ANY MECHANICAL EQUIPMENT OR PIPING INSULATION IS APPLIED.
23. TESTING, ADJUSTING, AND BALANCING AGENCY SHALL BE A MEMBER OF THE ASSOCIATED AIR BALANCE COUNCIL (AABC) OR THE NATIONAL ENVIRONMENTAL BALANCING BUREAU (NEBB). TESTING, ADJUSTING, AND BALANCING SHALL BE PERFORMED IN ACCORDANCE WITH THE AABC STANDARDS.

HVAC DUCTWORK – SHEET METAL

1. CERTAIN ITEMS SUCH AS RISES AND DROPS IN DUCTWORK,ACCESS DOORS, VOLUME DAMPERS, ETC., ARE INDICATED ON THE CONTRACT DOCUMENT DRAWINGS FOR CLARITY FOR A SPECIFIC LOCATION REQUIREMENT AND SHALL NOT BE INTERPRETED AS THE EXTENT OF THE REQUIREMENTS FOR THESE ITEMS.
2. CONTRACTOR TO CHECK AND CORRECT ANY AND ALL DEFICIENCIES IN EXISTING DUCTS. ALL NEW DUCTWORK WILL COMPLY WITH THE LATEST SMACNA GUIDELINES AND CONFORM WITH REQUIREMENTS OF THE LATEST HANDBOOKS PUBLISHED BY ASHRAE.
3. PROVIDE VOLUME DAMPER AT EACH TAP TO MAIN DUCT AND WHERE NECESSARY TO PROPERLY BALANCE SYSTEM.
4. SUPPLY AND RETURN DUCTWORK 10' FROM ALL HVAC UNITS SHALL BE LINED WITH 1.5" ACOUSTICAL LINING.
5. RE–INSULATE ALL DUCTWORK AND PIPING IN WHICH INSULATION HAS BEEN REMOVED OR DAMAGED WITH INSULATION EQUAL TO THE EXISTING INSULATION.
6. CONTRACTOR SHALL SUPPLY AND INSTALL ALL NECESSARY SUPPLY DIFFUSERS AND RETURN AIR REGISTERS WHERE INDICATED ON THE DRAWING. COORDINATE LOCATION OF DIFFUSERS AND REGISTERS WITH REFLECTED CEILING PLAN.
7. IN CORRIDORS WHERE CEILING SPEAKERS AND AIR DIFFUSERS ARE INDICATED BETWEEN THE SAME LIGHT FIXTURES, INSTALL BOTH DEVICES AT THE QUARTER POINTS BETWEEN THE FIXTURES.
8. UNLESS OTHERWISE SHOWN, LOCATE ALL ROOM THERMOSTATS 4'–0" (CENTER LINE) ABOVE THE FINISHED FLOOR. NOTIFY THE ENGINEER OF ANY ROOMS WHERE THE PRECEDING LOCATION CANNOT BE MAINTAINED OR WHERE THERE IS A QUESTION ON LOCATION.
9. ALL DUCTWORK SHALL CLEAR DOORS AND WINDOWS.
10. ALL DUCTWORK DIMENSIONS, AS SHOWN ON THE DRAWINGS, ARE INTERNAL CLEAR DIMENSIONS AND DUCT SIZE SHALL BE INCREASED TO COMPENSATE FOR DUCT LINING THICKNESS.
11. PROVIDE ALL 90–DEGREE SQUARE ELBOWS WITH DOUBLE RADIUS TURNING VANES UNLESS OTHERWISE INDICATED. ELBOWS IN DISHWASHER, KITCHEN, AND LAUNDRY EXHAUSTS SHALL BE OF UN–VANED SMOOTH RADIUS CONSTRUCTION WITH A RADIUS EQUAL TO 1–1/2 TIMES THE WIDTH OF THE DUCT. PROVIDE ACCESS DOORS UPSTREAM OF ALL ELBOWS WITH TURNING VANES.
12. COORDINATE DIFFUSER, REGISTER, AND GRILL LOCATIONS WITH ARCHITECTURAL REFLECTED CEILING PLANS, LIGHTING, AND OTHER CEILING ITEMS AND MAKE MINOR DUCT MODIFICATIONS TO SUIT.
13. LOCATE ALL MECHANICAL EQUIPMENT FOR UNOBSTRUCTED ACCESS TO UNIT ACCESS PANELS, CONTROLS, AND VALVING.
14. PROVIDE FLEXIBLE CONNECTIONS IN ALL DUCTWORK SYSTEMS (SUPPLY, RETURN, AND EXHAUST) CONNECTED TO AIR HANDLING UNITS, FANS, AND OTHER EQUIPMENT THAT REQUIRE VIBRATION ISOLATION. FLEXIBLE CONNECTIONS SHALL BE PROVIDED AT THE POINT OF CONNECTION TO THE EQUIPMENT UNLESS OTHERWISE INDICATED.
15. UNLESS OTHERWISE NOTED, ALL DUCTWORK IS OVERHEAD, TIGHT TO THE UNDERSIDE OF THE STRUCTURE, WITH SPACE FOR INSULATION IF NEEDED.
16. RUNS OF FLEXIBLE DUCT SHALL NOT EXCEED 5 FT.
17. ALL DUCTWORK SHALL BE COORDINATED WITH ALL TRADES INVOLVED. OFFSETS IN DUCTS, INCLUDING DIVIDED DUCTS AND TRANSITIONS AROUND OBSTRUCTIONS, SHALL BE PROVIDED AT NO ADDITIONAL COST TO THE OWNER.
18. PROVIDE ACCESS DOORS IN DUCTWORK FOR THE OPERATION, ADJUSTMENT, AND MAINTENANCE OF ALL FANS, VALVES, AND MECHANICAL EQUIPMENT.
19. ALL DUCTS SHALL BE GROUNDED ACROSS FLEXIBLE CONNECTIONS WITH FLEXIBLE COPPER GROUNDING STRAPS. GROUNDING STRAPS SHALL BE BOLTED OR SOLDERED TO BOTH THE EQUIPMENT AND THE DUCT.
20. SEE SPECIFICATIONS FOR DUCTWORK GAUGES, BRACING, HANGERS, AND OTHER REQUIREMENTS.
21. SMOKE DETECTORS SHALL BE FURNISHED AND WIRED BY THE ELECTRICAL CONTRACTOR. THE MECHANICAL CONTRACTOR SHALL BE RESPONSIBLE FOR MOUNTING THE SMOKE DETECTOR IN DUCTWORK AS SHOWN ON THE DRAWINGS AND IN ACCORDANCE WITH THE MANUFACTURER'S PRINTED INSTRUCTIONS.

SECTION 078413–PENETRATION FIRE–STOPPING

1.1 QUALITY ASSURANCE
- A. INSTALLER QUALIFICATIONS: AN FM GLOBAL–APPROVED FIRE–STOP CONTRACTOR OR A UL–QUALIFIED FIRE–STOP CONTRACTOR.
- B. FIRE–TEST–RESPONSE CHARACTERISTICS: UL, INTERTEK ETL SEMKO OR FM GLOBAL

1.2 PENETRATION FIRESTOPPING
- A. PENETRATIONS IN FIRE–RESISTANCE–RATED WALLS: F–RATINGS PER ASTM E 814 OR UL 1479.
- B. PENETRATIONS IN HORIZONTAL ASSEMBLIES: F– AND T–RATINGS PER ASTM E 814 OR UL 1479:
- C. PENETRATIONS IN SMOKE BARRIERS: L–RATINGS PER UL 1479.
- D. W–RATINGS: PER UL 1479.

1.3 INSTALLATION
- A. IDENTIFICATION: PREPRINTED METAL OR PLASTIC LABELS.

1.4 FIELD QUALITY CONTROL
- A. INSPECTION OF INSTALLED FIRE–STOPPING: BY OWNER–ENGAGED AGENCY ACCORDING TO ASTM E 2174.

1.5 THROUGH–PENETRATION FIRESTOP SYSTEM SCHEDULE

WHERE UL–CLASSIFIED SYSTEMS ARE INDICATED, THEY REFER TO SYSTEM NUMBERS IN UL'S "FIRE RESISTANCE DIRECTORY" UNDER PRODUCT CATEGORY XHEZ.

FOR THE FOLLOWING SYSTEMS:

METALLIC AND NON–METALLIC PIPES, CONDUIT, OR TUBING, ELECTRICAL CABLES, CABLE TRAYS WITH ELECTRIC CABLES, MISCELLANEOUS ELECTRICAL PENETRANTS, INSULATED PIPES, GROUPINGS OF PENETRANTS, USE ON OR MORE THE FOLLOWING MATERIALS:

- a. LATEX SEALANT
- b. SILICONE SEALANT
- c. INTUMESCENT PUTTY
- d. MORTAR
- h. SILICONE FOAM
- i. PILLOWS/BAGS
- j. INTUMESCENT WRAP STRIPS
- k. INTUMESCENT COMPOSITE SHEET

1.6 MANUFACTURERS
1. HILTI CONSTRUCTION CHEMICAL, INC
2. TREMCO INC.
3. 3M FIRE PROTECTION PRODUCTS

END OF SECTION 078413

Property of NY Engineers

**SHEET HISTORY SCHEDULE**

| | | |
|---|---|---|
| | | |
| | | |
| | | |
| | | |
| | | |

ISSUE DATE: 10/16/2024 12:02:18 PM

**RENOVATION BUILT -OUT**

**ZEITLIN'S DELICATESSEN**

| | |
|---|---|
| DRAWN BY: | NYE |
| QAQC: | NYE |
| APPROVED BY: | NYE |
| PROJECT NUMBER: | 2432 |

**MECHANICAL GENERAL NOTES, SYMBOLS LIST & ABBREVIATIONS**

**M0.1**

# SPECIFICATIONS

## SECTION 0001 – NOTICE TO BIDDERS

1.1 BIDDERS REPRESENTATIONS

A. THE BIDDER BY MAKING A BID REPRESENTS THAT:

THE BIDDER HAS READ AND UNDERSTANDS THE BIDDING DOCUMENTS, TO THE EXTENT THAT SUCH DOCUMENTATION RELATES TO THE WORK FOR WHICH THE BID IS SUBMITTED, AND FOR OTHER PORTIONS OF THE PROJECT, IF ANY, BEING BID CONCURRENTLY OR PRESENTLY UNDER CONSTRUCTION.

B. THE BID IS MADE IN COMPLIANCE WITH THE BIDDING DOCUMENTS.

C. THE SPECIFICATIONS AND DRAWINGS ARE INTENDED TO SERVE JOINTLY AS A BASIS FOR THE BIDDER TO SUBMIT A CONTRACT PRICE FOR THE MATERIAL AND LABOR.

D. SHOULD CONFLICTS OR DISCREPANCIES OCCUR WITHIN THE BIDDING DOCUMENTS, THE ITEM OR ITEMS IN DISPUTE THAT REPRESENT THE GREATER COST SHALL PREVAIL IN THE FINAL BID.

E. THE BID IS BASED UPON THE MATERIALS, EQUIPMENT AND SYSTEMS REQUIRED BY THE BIDDING DOCUMENTS WITHOUT EXCEPTION.

1.2 EXISTING CONDITIONS AND COORDINATION

A. THE BIDDER HAS VISITED THE SITE, BECOME FAMILIAR WITH LOCAL CONDITIONS UNDER WHICH THE WORK IS TO BE PERFORMED AND HAS CORRELATED THE BIDDER'S PERSONAL OBSERVATIONS WITH THE REQUIREMENTS OF THE PROPOSED BIDDING DOCUMENTS.

B. THE BIDDER SHALL PROPOSE COORDINATION OF WORK SUCH THAT CONFLICTS WITH OTHER TRADES AND SPACE ALLOCATIONS ARE AVOIDED.

1.3 RESPONSIBILITIES

A. THE BIDDER UNDERSTANDS THAT ANY CONTRACTOR SHALL BE FULLY RESPONSIBLE FOR THE TIMELY COMPLETION AND ACCEPTANCE OF THEIR WORK AND THAT ANY ITEMS DAMAGED, LOST OR STOLEN DURING TIME OF CONSTRUCTION SHALL BE REPAIRED OR REPLACED WITHOUT ANY ADDITIONAL COST TO THE OWNER.

B. THE BIDDER UNDERSTANDS THAT ANY PROPOSED WORK IN OCCUPIED TENANT SPACES SHALL BE PERFORMED DURING TIMES OF NON–TENANT OCCUPANCY OR AS SCHEDULED OR DIRECTED BY THE BUILDING MANAGER.

C. THE BIDDER UNDERSTANDS THAT ANY PROPOSED SHUT–DOWN OF EXISTING SYSTEMS DURING CONSTRUCTION SHALL BE PRE–ARRANGED WITH THE BUILDING MANAGER AND THAT SUCH SHUT–DOWNS ARE TO BE KEPT TO A MINIMUM.

END OF SECTION 0001

## SECTION 0101 – QUALITY OF WORK

1.1 WORKMANSHIP

A. ALL WORK SHALL BE FREE FROM DEFECTS IN MATERIALS AND WORKMANSHIP FOR A PERIOD OF ONE YEAR FROM DATE OF FINAL ACCEPTANCE.

B. ALL DEFECTS WHICH DEVELOP OR ARE DISCOVERED WITHIN THIS PERIOD SHALL BE REPAIRED BY THE CONTRACTOR TO THE SATISFACTION OF THE ARCHITECT OR BUILDING MANAGER AT NO ADDITIONAL COST TO THE OWNER.

C. UPON COMPLETION OF THE WORK THE CONTRACTOR SHALL REMOVE FROM THE SITE, ALL TOOLS, DEMOLISHED APPLIANCES AND ANY SURPLUS MATERIAL.

1.2 CODE COMPLIANCE

A. ALL WORK SHALL MEET ALL STATE AND LOCAL CODES HAVING JURISDICTION.

END OF SECTION 0101

## SECTION 0102 –REQUIRED DOCUMENTS

1.1 SHOP DRAWINGS

A. A SET OF PRINTS FOR ANY MECHANICAL WORK INCLUDING BUT NOT LIMITED TO, DUCTWORK AND PIPING LAYOUT SHALL BE SUBMITTED FOR APPROVAL TO THE ENGINEER PRIOR TO CONSTRUCTION OR PURCHASE OF MATERIALS.

1.2 SUBMITTALS

A. EQUIPMENT SUBMITTALS OF ALL PROPOSED MECHANICAL AND ANCILLARY EQUIPMENT INCLUDING ALL ACCESSORIES SHALL BE SUBMITTED TO THE ENGINEER FOR REVIEW. ALL PERTINENT MODELS, SIZES, ACCESSORIES AND CHOICES SHALL BE CLEARLY CHECKED, PRINTED OR OTHERWISE INDICATED ON THE SUBMITTALS.

1.3 RECORD DRAWINGS

A. UPON COMPLETION OF THE WORK, A RECORD DRAWING SHALL BE SUBMITTED TO THE OWNER DEPICTING ALL SUBSEQUENT CHANGES, ADDITIONS AND OR CORRECTIONS TO THE CONTRACT DRAWINGS AND OR CONTRACT SCOPE MADE DURING CONSTRUCTION. THIS DRAWING SHALL REPRESENT A COMPLETE RECORD OF THE WORK INSTALLED.

1.4 EQUIPMENT OPERATING INSTRUCTIONS

A. ON COMPLETION AND ACCEPTANCE OF WORK, THIS CONTRACTOR SHALL FURNISH WRITTEN INSTRUCTIONS,EQUIPMENT MANUALS AND DEMONSTRATE TO THE OWNER THE PROPER OPERATION AND MAINTENANCE OF ALL EQUIPMENT AND APPARATUS FURNISHED UNDER THIS CONTRACT.

B. THESE INSTRUCTIONS SHALL BE TYPED ON 8–1/2 IN. X 11 IN. PAPER AND BOUND IN THREE–RING BINDERS WITH CLEAR ACETATE COVERS. THE CONTRACTOR SHALL GIVE THREE COPIES OF THE INSTRUCTIONS TO THE OWNER AND ONE ELECTRONIC COPY TO THE ENGINEER.

C. THE INSTRUCTION BOOKLET SHALL BE ORGANIZED IN SECTIONS, WITH ONE SECTION PER SYSTEM. THE COVER OF THE INSTRUCTION BOOKLET SHALL BEAR THE NAME, ADDRESS AND PHONE NUMBER OF THE PROJECT, ARCHITECT, ENGINEER, MECHANICAL CONTRACTOR AND SUBCONTRACTORS.

END OF SECTION 0102

## SECTION 230517 – SLEEVES AND SLEEVE SEALS FOR HVAC PIPING

1.1 SLEEVE–SEAL SYSTEMS

A. FIELD–ASSEMBLED, MODULAR SEALING–ELEMENT UNIT FOR FILLING ANNULAR SPACE BETWEEN PIPING AND SLEEVE.

1. SEALING ELEMENTS: EPDM RUBBER OR NBR.
2. PRESSURE PLATES: CARBON STEEL, PLASTIC, STAINLESS STEEL.
3. CONNECTING BOLTS AND NUTS: CARBON STEEL WITH CORROSION–RESISTANT COATING, STAINLESS STEEL.

B. MANUFACTURERS: SUBJECT TO COMPLIANCE WITH REQUIREMENTS, AVAILABLE MANUFACTURERS OFFERING PRODUCTS THAT MAY BE INCORPORATED INTO THE WORK INCLUDE, BUT ARE NOT LIMITED TO, THE FOLLOWING:

1. ADVANCE PRODUCTS & SYSTEMS, INC.
2. CALPICO, INC.
3. METRAFLEX COMPANY (THE).
4. PIPELINE SEAL AND INSULATOR, INC.
5. PROCO PRODUCTS, INC.

1.2 SLEEVE–SEAL FITTINGS

A. MANUFACTURED PLASTIC, SLEEVE–TYPE, PLASTIC OR RUBBER WATER–STOP ASSEMBLY MADE FOR IMBEDDING IN CONCRETE SLAB OR WALL.

1.3 GROUT

A. NON–SHRINK, FACTORY PACKAGED.

1.4 SLEEVE AND SLEEVE–SEAL SCHEDULE

A. USE SLEEVES AND SLEEVE SEALS FOR THE FOLLOWING PIPING–PENETRATION APPLICATIONS:

1. INTERIOR PARTITIONS:
   a. PIPING SMALLER THAN NPS 6 (DN 150): GALVANIZED–STEEL–PIPE SLEEVES, PVC–PIPE SLEEVES.
   b. PIPING NPS 6 (DN 150) AND LARGER: GALVANIZED–STEEL–SHEET SLEEVES.

END OF SECTION 230517

## SECTION 230518 – ESCUTCHEONS FOR HVAC PIPING

PART 2 – PRODUCTS

2.1 ESCUTCHEONS

A. ONE–PIECE, CAST–BRASS TYPE: WITH POLISHED, CHROME–PLATED AND ROUGH–BRASS FINISH AND SETSCREW FASTENER.

B. ONE–PIECE, DEEP–PATTERN TYPE: DEEP–DRAWN, BOX–SHAPED BRASS WITH CHROME–PLATED FINISH AND SPRING–CLIP FASTENERS.

C. ONE–PIECE, STAMPED–STEEL TYPE: WITH CHROME–PLATED FINISH AND SPRING–CLIP FASTENERS.

2.2 FLOOR PLATES

A. ONE–PIECE FLOOR PLATES: CAST–IRON FLANGE WITH HOLES FOR FASTENERS.

PART 3 – EXECUTION

3.1 INSTALLATION

A. INSTALL ESCUTCHEONS FOR PIPING PENETRATIONS OF WALLS, CEILINGS, AND FINISHED FLOORS.

B. INSTALL ESCUTCHEONS WITH ID TO CLOSELY FIT AROUND PIPE, TUBE, AND INSULATION OF PIPING AND WITH OD THAT COMPLETELY COVERS OPENING.

1. ESCUTCHEONS FOR NEW PIPING:
   a. PIPING WITH FITTING OR SLEEVE PROTRUDING FROM WALL: ONE–PIECE, DEEP–PATTERN TYPE.
   b. INSULATED PIPING: ONE–PIECE, STAMPED–STEEL TYPE.
   c. BARE PIPING AT WALL AND FLOOR PENETRATIONS IN FINISHED SPACES: ONE–PIECE, CAST–BRASS TYPE WITH POLISHED, CHROME–PLATED FINISH OR STAMPED–STEEL TYPE.
   d. BARE PIPING AT CEILING PENETRATIONS IN FINISHED SPACES: ONE–PIECE, CAST–BRASS TYPE WITH POLISHED, CHROME–PLATED FINISH OR STAMPED–STEEL TYPE.

3.2 FIELD QUALITY CONTROL

A. REPLACE BROKEN AND DAMAGED ESCUTCHEONS AND FLOOR PLATES USING NEW MATERIALS.

END OF SECTION 230518

## SECTION 230529 – HANGERS AND SUPPORTS FOR HVAC PIPING AND EQUIPMENT

1.1 PERFORMANCE REQUIREMENTS

A. DELEGATED DESIGN: DESIGN TRAPEZE PIPE HANGERS AND EQUIPMENT SUPPORTS, INCLUDING COMPREHENSIVE ENGINEERING ANALYSIS BY A QUALIFIED PROFESSIONAL ENGINEER, USING PERFORMANCE REQUIREMENTS AND DESIGN CRITERIA INDICATED.

B. STRUCTURAL PERFORMANCE: HANGERS AND SUPPORTS FOR HVAC PIPING AND EQUIPMENT SHALL WITHSTAND THE EFFECTS OF GRAVITY LOADS AND STRESSES WITHIN LIMITS AND UNDER CONDITIONS INDICATED ACCORDING TO ASCE/SEI 7.

1. DESIGN SUPPORTS FOR MULTIPLE PIPES CAPABLE OF SUPPORTING COMBINED WEIGHT OF SUPPORTED SYSTEMS, SYSTEM CONTENTS, AND TEST WATER.
2. DESIGN EQUIPMENT SUPPORTS CAPABLE OF SUPPORTING COMBINED OPERATING WEIGHT OF SUPPORTED EQUIPMENT AND CONNECTED SYSTEMS AND 3.DESIGN SEISMIC–RESTRAINT HANGERS AND SUPPORTS FOR PIPING AND EQUIPMENT AND OBTAIN APPROVAL FROM AUTHORITIES HAVING JURISDICTION.

1.2 SUBMITTALS

A. SHOP DRAWINGS: SIGNED AND SEALED BY A PROFESSIONAL ENGINEER

1.3 QUALITY ASSURANCE

A. AWS D1.1/D1.1M, "STRUCTURAL WELDING CODE – STEEL."

1.4 COMPONENTS

A. METAL PIPE HANGERS AND SUPPORTS: CARBON OR STAINLESS STEEL

B. TRAPEZE PIPE HANGERS: CARBON OR STAINLESS STEEL

C. FIBERGLASS PIPE HANGERS: –CLEVIS, CENTURY COMPOSITES, COOPER B–LINE

D. METAL FRAMING SYSTEMS: MFMA MANUFACTURER

E. FIBERGLASS STRUT SYSTEMS: COOPER B–LINE

F. THERMAL–HANGER SHIELD INSERTS:

G. FASTENER SYSTEMS: POWDER–ACTUATED FASTENERS OR MECHANICAL–EXPANSION ANCHORS

H. PIPE STANDS: COMPACT, LOW TYPE, SINGLE PIPE, HIGH TYPE, SINGLE PIPE, HIGH TYPE, MULTIPLE PIPES, CURB–MOUNTED TYPE

I. EQUIPMENT SUPPORTS.

END OF SECTION 230529

## SECTION 230548 – VIBRATION CONTROLS FOR HVAC PIPING AND EQUIPMENT

PART 1 – GENERAL

1.1 COMPONENTS

A. VIBRATION ISOLATORS:

1. ISOLATOR PADS: NEOPRENE, RUBBER, HERMETICALLY AND/OR SEALED COMPRESSED FIBERGLASS
2. MOUNTS: DOUBLE–DEFLECTION TYPE.
3. RESTRAINED MOUNTS: ALL DIRECTIONAL MOUNTINGS WITH SEISMIC RESTRAINT; CAST–DUCTILE–IRON HOUSING.
4. SPRING ISOLATORS: FREESTANDING, LATERALLY STABLE, OPEN–SPRING TYPE.
5. RESTRAINED SPRING ISOLATORS: FREESTANDING, STEEL, OPEN–SPRING TYPE WITH SEISMIC RESTRAINT.
6. HOUSED SPRING MOUNTS: DUCTILE–IRON OR STEEL HOUSING, WITH INTEGRAL, VERTICALLY ADJUSTABLE SEISMIC SNUBBERS.
7. ELASTOMERIC HANGERS: DOUBLE–DEFLECTION TYPE.
8. SPRING HANGERS: COMBINATION COIL–SPRING AND ELASTOMERIC–INSERT HANGERS WITH SPRING AND INSERT IN COMPRESSION.
9. SPRING HANGERS WITH VERTICAL–LIMIT STOP: COMBINATION COIL–SPRING AND ELASTOMERIC–INSERT HANGERS WITH SPRING AND INSERT IN COMPRESSION AND WITH VERTICAL–LIMIT STOP.
10. PIPE RISER RESILIENT SUPPORT: ALL–DIRECTIONAL, ACOUSTICAL PIPE ANCHOR.
11. RESILIENT PIPE GUIDES.

B. AIR–MOUNTING SYSTEMS:

1. AIR MOUNTS: FREESTANDING, SINGLE OR MULTIPLE, COMPRESSED–AIR BELLOWS.
2. RESTRAINED AIR MOUNTS: HOUSED COMPRESSED–AIR BELLOWS.

C. RESTRAINED VIBRATION ISOLATION ROOF–CURB RAILS: FACTORY–ASSEMBLED, FULLY ENCLOSED, INSULATED, AIR–AND WATERTIGHT CURB RAIL; WITH SPRING ISOLATORS MOUNTED ON ELASTOMERIC ISOLATION PADS, AND SNUBBER BUSHINGS.

D. VIBRATION ISOLATION EQUIPMENT BASES:

1. STEEL BASE: FACTORY–FABRICATED, WELDED, STRUCTURAL–STEEL BASES AND RAILS.
2. INERTIA BASE: FACTORY–FABRICATED, WELDED, STRUCTURAL–STEEL BASES AND RAILS READY FOR FIELD–APPLIED, CAST–IN–PLACE CONCRETE

1.2 FIELD QUALITY CONTROL

A. TESTING: BY EITHER: OWNER–ENGAGED AGENCY, CONTRACTOR–ENGAGED AGENCY, OR CONTRACTOR.

PART–2 PRODUCTS

1.1 VIBRATION ISOLATORS & SEISMIC–RESTRAINT DEVICES

A. AVAILABLE MANUFACTURERS: SUBJECT TO COMPLIANCE WITH REQUIREMENTS, MANUFACTURERS OFFERING PRODUCTS THAT MAY BE INCORPORATED INTO THE WORK INCLUDE, BUT ARE NOT LIMITED TO, THE FOLLOWING:

B. MANUFACTURERS: SUBJECT TO COMPLIANCE WITH REQUIREMENTS, PROVIDE PRODUCTS BY ONE OF THE FOLLOWING:

1. ACE MOUNTINGS CO., INC.
2. AMBER/BOOTH COMPANY, INC.
3. CALIFORNIA DYNAMICS CORPORATION.
4. HILTI, INC.
5. ISOLATION TECHNOLOGY, INC.
6. KINETICS NOISE CONTROL.
7. LOOS & CO.; CABLEWARE DIVISION.
8. MASON INDUSTRIES.
9. TOLCO INCORPORATED; A BRAND OF NIBCO INC.
10. UNISTRUT; TYCO INTERNATIONAL, LTD.

END OF SECTION 230548

## SECTION 230593 – TESTING, ADJUSTING, AND BALANCING FOR HVAC

1.1 SUMMARY

A. TESTING, ADJUSTING, AND BALANCING FOR THE FOLLOWING:

1. AIR SYSTEMS: CONSTANT VOLUME.

1.2 QUALITY ASSURANCE

A. THE CONTRACTOR SHALL PROCURE THE SERVICES OF A TESTING, ADJUSTING AND BALANCING (TAB) SPECIALIST WHO SPECIALIZES IN HEATING, VENTILATION AND AIR CONDITIONING SYSTEMS. THE TAB AGENT SHALL HAVE THE FOLLOWING QUALIFICATIONS: AABC, NEBB OR TABB CERTIFIED.

1.3 EXECUTION

A. THE TAB SPECIALIST SHALL PERFORM FLOW MEASUREMENTS OF ALL EXISTING AIR AND HYDRONIC SYSTEMS THAT ARE TO REMAIN OR TO BE INCORPORATED INTO NEW WORK PRIOR TO THE STARTING OF WORK IN THE PROJECT SCOPE. A REPORT OF THESE MEASUREMENTS, INDICATING ANY AND ALL DEFICIENCIES SHALL BE SUBMITTED FOR OWNER REVIEW.

B. THE TAB SPECIALIST SHALL PERFORM FLOW MEASUREMENTS OF ALL NEW AIR AND HYDRONIC SYSTEMS AS LISTED ABOVE IN THE PROJECT SCOPE. A REPORT OF THESE MEASUREMENTS, INDICATING ANY AND ALL DEFICIENCIES SHALL BE SUBMITTED FOR OWNER REVIEW.

C. THE REPORT SHALL INDICATE A SCHEMATIC DIAGRAM INDICATING LOCATIONS OF ALL EQUIPMENT TESTED AND MEASUREMENT LOCATIONS.

D. PRIOR TO FINAL INSPECTION OF THE WORK, THE TAB SPECIALIST SHALL BALANCE ALL SYSTEMS AS INDICATED ABOVE TO THE REQUIREMENTS OF THE DESIGN.

E. THE CONTRACTOR SHALL HAVE FURNISH AND INSTALL ALL ADDITIONAL BALANCING EQUIPMENT, PRESSURE TAPS, GAUGES AND OTHER EQUIPMENT AS REQUIRED FOR A PROPERLY BALANCED SYSTEM AT NO ADDITIONAL COST TO THE OWNER. SUCH ADDITIONAL EQUIPMENT SHALL ADHERE IN STRICT ACCORDANCE WITH THE RESPECTIVE EQUIPMENT MANUFACTURER'S RECOMMENDATIONS.

F. THE CONTRACTOR SHALL HAVE THE TESTING AND BALANCING SPECIALIST COORDINATE ALL WORK OF THIS S3ECTION WITH THE BUILDING MANAGER. BALANCING WORK SHALL NOT CONFLICT WITH OTHER WORK SO AS TO MAINTAIN COMPLETION WITHIN THE SPECIFIED TIME.

G. ALL INSTRUMENTS USED FOR TAB SHALL BE MAINTAINED IN GOOD WORKING CONDITION AND ACCURATELY CALIBRATED.

H. TOLERANCES: PLUS OR MINUS 5 PERCENT OF DESIGN VALUES.

I. INSPECTIONS: RANDOM CHECKS BY OWNER OR ARCHITECT TO VERIFY FINAL TESTING, ADJUSTING, AND BALANCING REPORT.

J. ADDITIONAL TESTS: RANDOM TESTS WITHIN 90 DAYS OF COMPLETING TAB TO VERIFY BALANCE CONDITIONS AND SEASONAL TESTS.

END OF SECTION 230593

## SECTION 230713 – DUCT INSULATION

1.1 QUALITY ASSURANCE

SURFACE–BURNING CHARACTERISTICS: ALL INSULATION SHALL HAVE COMPOSITE (INSULATION JACKET OR FACING AND ADHESIVE USED TO ADHERE THE FACING OR JACKET TO THE INSULATION) A FLAME–SPREAD INDEX OF 25, AND SMOKE–DEVELOPED INDEX OF 50 FOR INSULATION INSTALLED INDOOR, 75, AND SMOKE–DEVELOPED INDEX OF 150 FOR INSULATION INSTALLED OUTDOORS; ACCORDING TO ASTME 84.

1.2 FIELD QUALITY CONTROL

A. FIELD INSPECTIONS: BY OWNER–ENGAGED AGENCY.

1.3 INDOOR DUCT AND PLENUM INSULATION SCHEDULE;

A. CONCEALED, RECTANGULAR, ROUND AND FLAT–OVAL, SUPPLY–RETURN, OUTDOOR–AND EXHAUST–AIR DUCT AND AIR PLENUM INSULATION:

B. FLEXIBLE ELASTOMERIC, MINERAL–FIBER BLANKET,

MINERAL–FIBER BOARD OR POLYOLEFIN WITH MINIMUM INSTALLED THERMAL RESISTANCE AS FOLLOWS:

UNCONDITIONED SPACES WITHIN BUILDING: R–6
WITHIN BUILDING ENVELOPE ASSEMBLY: R–12
OUTSIDE OF BUILDING: R–12

1.4 ITEMS NOT INSULATED:

1. FIBROUS–GLASS DUCTS.
2. METAL DUCTS WITH DUCT LINER OR SUFFICIENT THICKNESS TO COMPLY WITH ENERGY CODE ANDASHRAE/IESNA 90.1.
3. FACTORY–INSULATED FLEXIBLE DUCTS.
4. FACTORY–INSULATED PLENUMS AND CASINGS.
5. FLEXIBLE CONNECTORS.
6. VIBRATION–CONTROL DEVICES.
7. FACTORY–INSULATED ACCESS PANELS AND DOORS.
8. DUCTS THAT HAVE INTERNAL ACOUSTICAL LINING.

1.5 PRODUCTS

A. THE FOLLOWING INSULATION MANUFACTURERS WILL BE ACCEPTABLE:

1. JOHNS–MANVILLE
2. OWENS–CORNING

1.6 ACOUSTICAL TREATMENT

1. WHERE SHOWN ON THE DRAWINGS, LOW PRESSURE DUCTWORK SHALL BE LINED WITH 1.5" THICK R–6 AS MANUFACTURED BY DUCTMATE, 1–1/2 POUND MINIMUM DENSITY, NEOPRENE COATED, FLEXIBLE FIBERGLASS DUCT LINER. LINING SHALL COMPLY WITH NFPA 90A AND SHALL HAVE A FLAME SPREAD CLASSIFICATION OF NOT MORE THAN 25 AND A SMOKE DEVELOPED RATING NOT MORE THAN 50. DUCT SIZES WHERE LINING IS INDICATED ON PLANS ARE MINIMUM INSIDE CLEAR DIMENSIONS REQUIRED,

END OF SECTION 230713

## SECTION 233113 – METAL DUCTS

1.1 CONSTRUCTION

A. EACH DUCT SYSTEM SHALL BE CONSTRUCTED FOR THE SPECIFIC SMACNA DUCT PRESSURE CLASSIFICATIONS SHOWN ON THE CONTRACT DRAWINGS. WHERE NO PRESSURE CLASSES ARE SPECIFIED BY THE DESIGNER, THE SMACNA 2–1/2 INCH WG PRESSURE CLASS IS THE BASIS OF COMPLIANCE WITH THESE STANDARDS, REGARDLESS OF THE VELOCITY IN THE DUCT.

B. ALL DUCTWORK SHALL BE CONSTRUCTED TO SMACNA 2" WG DESIGN AND NOT LESS THAN THE FOLLOWING STANDARDS:

1. DUCTWORK SHALL BE TRANSVERSELY JOINTED BY CONNECTING SEAMS OF COMPANION ANGLES, FORMED FROM 1–1/2"X1–1/2"X1/8" GALVANIZED ANGLES, TACK–WELDED OR RIVETED TO THE DUCT. THE ANGLE FRAME SHALL BE CONTINUOUSLY FLANGED UP INTO UPRIGHT OF ANGLE AND EACH CORNER SHALL BE FILLED IN AND GROUND SMOOTH. JOINTS SHALL BE GASKETED WITH 1/8" THICK REINFORCED GASKET, OVERLAPPED AT CORNERS, GASKET SIMILAR TO 3M–1202 OR APPROVED EQUAL.
2. RECTANGULAR FITTINGS AND ALL TRANSITION PIECES FROM RECTANGULAR TO ROUND SHALL BE NO. 16 GAUGE ALL WELDED CONSTRUCTION.
3. HORIZONTAL DUCTS SHALL BE SUPPORTED ON NOT MORE THAN 6' CENTERS. VERTICAL RISERS SHALL BE SUPPORTED AT EACH FLOOR.
4. LONGITUDINAL SEAMS FOR RECTANGULAR DUCTWORK SHALL BE PITTSBURGH LOCK SEAMS WITH SEALING COMPOUND, EQUAL TO BENJAMIN FOSTER NO. 30–03 INSERTED INTO SEAM. ALL SEAMS SHALL BE BRUSHED WITH NO. 30–02 AND COVERED WITH APPROVED SEALING TAPE.
5. RECTANGULAR DUCTWORK 18 GAUGE AND HEAVIER, FILLER RODS SHALL BE IN ACCORDANCE WITH SPECIFICATIONS FOR IRON AND STEEL GAS WELDING RODS, ASTM 215; AWG A5.2.
6. ALL FITTINGS SUCH AS ELBOWS, TEES, ETC., SHALL BE NO. 20 GAUGE ZINC COATED STEEL. ELBOWS SHALL BE OF FIVE (5) PIECE WELDED AIRTIGHT CONSTRUCTION.

C. WHERE LATEST EDITION OF SMACNA DOES NOT CLEARLY STATE GAUGES AND/OR STIFFENERS TO BE USED OR, WHERE SMACNA STANDARDS REQUIRE INTERPRETATION, THE FOLLOWING MINIMUM METAL GAUGES AND BRACING SHALL BE USED:

| USG | MAX. SIDE INCHES | TRANSVERSE JOINTS AND BRACING |
|---|---|---|
| 22 | UP TO 12 | S SLIP, DRIVE SLIP, ONE INCH POCKET LOCK ON 8 FOOT CENTERS |
| 22 | 13 TO 24 | 1"X1"X1/8" ANGLES ON 4 FOOT CENTERS |
| 20 | 25 TO 35 | 1"X1"X1/8" ANGLES ON 2 FOOT CENTERS |

D. PROVIDE TAPPING IN DUCTS FOR THERMOMETERS WHERE SPECIFIED. IN ADDITION, PROVIDE AN AIRTIGHT PLUGGED TAPPING LOCATED AS FOLLOWS:

1. UPSTREAM OF EACH REHEAT COIL AND VAV BOX.
2. DOWNSTREAM OF EACH REHEAT COIL AND VAV BOX.

E. FLAT OVAL OR ROUND DUCTWORK MAY BE PROVIDED IN LIEU RECTANGULAR DUCTWORK WITH THE REINFORCEMENT FOR FLAT SIDES SAME AS SPECIFIED FOR THE RECTANGULAR DUCTWORK, AND AS PER SMACNA FLAT OVAL DUCT CONSTRUCTION STANDARDS SHOWN IN FIG. 3–6 AND AS SHOWN IN FIG. 3–1 AND 3–2 FOR ROUND DUCTWORK.

F. ALL DUCTWORK SHALL BE SEALED TO CLASS "A" AND LEAK TESTED TO MEAT SMACNA CLASS 6 FOR RECTANGULAR AND CLASS 3 FOR ROUND DUCTS.

1.2 MATERIALS

A. SINGLE–WALL RECTANGULAR DUCTS AND FITTINGS.

B. SINGLE–WALL ROUND AND FLAT–OVAL DUCTS AND FITTINGS.

C. SHEET METAL MATERIALS:

1. GALVANIZED SHEET STEEL.
2. STAINLESS–STEEL SHEETS.
3. ALUMINUM SHEETS.
4. FACTORY–APPLIED ANTI–MICROBIAL COATING.

D. DUCT LINER:

1. FIBROUS GLASS, TYPE I, FLEXIBLE.
   a. WITH ANTI–MICROBIAL EROSION–RESISTANT COATING.
2. FLEXIBLE ELASTOMERIC.
3. NATURAL FIBER.

E. SEALANT MATERIALS:

1. TWO–PART TAPE SEALING SYSTEM.
2. WATER–BASED JOINT AND SEAM SEALANT.
3. SOLVENT–BASED JOINT AND SEAM SEALANT.
4. FLANGED JOINT SEALANT.
5. FLANGE GASKETS.
6. ROUND DUCT JOINT O–RING SEALS.

1.3 DUCT CLEANING

A. CLEAN EXISTING DUCT SYSTEM(S) BEFORE TESTING, ADJUSTING, AND BALANCING.

B. CLEAN THE FOLLOWING ITEMS:

1. AIR OUTLETS AND INLETS.
2. SUPPLY, RETURN, AND EXHAUST FANS.
3. AIR–HANDLING UNITS.
4. COILS AND RELATED COMPONENTS.
5. RETURN–AIR DUCTS, DAMPERS, ACTUATORS, AND TURNING VANES.
6. SUPPLY–AIR DUCTS, DAMPERS, ACTUATORS, AND TURNING VANES.
7. DEDICATED EXHAUST AND VENTILATION COMPONENTS AND MAKEUP AIR SYSTEMS.

1.4 DUCT SCHEDULE

A. ALL DUCTS SHALL BE GALVANIZED STEEL EXCEPT AS FOLLOWS:
1. MOIST ENVIRONMENT DUCT MATERIAL: ALUMINUM.

END OF SECTION 233113

## SECTION 233713 – DIFFUSERS AND GRILLES

1.1 PRODUCTS

A. DIFFUSERS AND GRILLES SHALL BE FURNISHED AND INSTALLED FOR CAPACITIES AND IN LOCATIONS INDICATED ON DRAWINGS. ALL REGISTERS AND DIFFUSERS SHALL BE PRIME COATED STEEL OR EXTRUDED ALUMINUM FINISHED UNLESS OTHERWISE NOTED IN BAKED WHITE ENAMEL.

B. MANUFACTURERS: TITUS

1. SUBJECT TO COMPLIANCE WITH REQUIREMENTS, PROVIDE PRODUCT BY ONE OF THE FOLLOWING:
   a. CARNES.
   b. HART & COOLEY INC.
   c. KRUEGER.
   d. METALAIRE, INC.
   e. NAILOR INDUSTRIES INC.

C. ALL DIFFUSERS SHALL HAVE CONTROLLING/EQUALIZING GRID AND OPPOSED BLADE DAMPER UNLESS OTHERWISE NOTED.

D. ALL DUCTED RETURN REGISTERS SHALL HAVE AN OPPOSED BLADE DAMPER UNLESS OTHERWISE NOTED.

END OF SECTION 233713

### PIPING INSULATION

A. PIPING SERVING AS PART OF A HEATING OR COOLING SYSTEM SHALL BE THERMALLY INSULATED IN ACCORDANCE WITH NYSECC 2020 TABLE C403.11.3.

B. PIPING, VALVES AND FITTINGS TO BE INSULATED:

MINIMUM PIPE INSULATION THICKNESS (IN.)

| FLUID OPERATING TEMP. RANGE & USAGE (°F) | INSULATION CONDUCTIVITY | | NOMINAL PIPE OR TUBE SIZE (IN.) | | | | |
|---|---|---|---|---|---|---|---|
| | CONDUCTIVITY BTU.IN./(H.FT2.°F) | MEAN RATING TEMP., °F | <1 | 1 TO <1–1/2 | 1–1/2 TO <4 | 4 TO <8 | ≥8 |
| 105 — 140 | 0.21 — 0.28 | 100 | 1.0 | 1.0 | 1.5 | 1.5 | 1.5 |
| 40 — 60 | 0.21 — 0.27 | 75 | 0.5 | 0.5 | 1.0 | 1.0 | 1.0 |
| < 40 | 0.20 — 0.26 | 50 | 0.5 | 1.0 | 1.0 | 1.0 | 1.5 |

1) LOW TEMPERATURE PIPING SYSTEMS – 0 TO 60 DEG F INCLUDING:

CONDENSATE DRAIN PIPING.

INSULATION SCHEDULE – PIPING

| SERVICE | THICKNESS | MATERIAL FINISH |
|---|---|---|
| REFRIGERANT PIPING | 1.5" | P–6 |
| CONDENSER DRAIN PIPING (IF RUNNING THROUGH EXTERIOR WALL) | 1.0" | P–6 |

2) PROTECTIVE COVERINGS SHALL BE INSTALLED ON AREAS OF INSULATION THAT ARE EXPOSED TO WEATHER OR SUBJECT TO MECHANICAL DAMAGE. THE PROTECTIVE COVERING SHALL BE:

a. ARMA–CHEK SILVER" MULTI–LAYER LAMINATE OF ALUMINUM, COATED WITH A UV PROTECTIVE FILM AND BACKED WITH A FLEXIBLE PVC FILM. THE MATERIAL SHOULD BE ADHERED WITH ARMAFLEX 520 ADHESIVE OR EQUIVALENT, AND ALL JOINS AND SEAMS SECURED WITH "ARMA–CHEK SILVER TAPE". INSTALLATION SHALL BE IN ALL CASES TO THE MANUFACTURER'S RECOMMENDATIONS.

OR

b. HIGH DENSITY RUBBER CLADDING OF THE "ARMA–CHECK R" TYPE BONDED USING AN APPROPRIATE FULL CONTACT ADHESIVE WITH A MINIMUM 50 MM OVERLAP AT ALL BUTT JOINTS AND LONGITUDINAL SEAMS. A WEATHER–PROOF MASTIC SEALANT SHALL BE APPLIED OVER ALL SEAMS AND JOINTS. ALL MATERIAL SHALL BE OVERLAPPED AND STAGGERED IN SUCH A WAY AS TO ENSURE A WATERSHED IS ALWAYS PROVIDED. INSTALLATION SHALL BE IN ALL CASES TO THE MANUFACTURER'S RECOMMENDATIONS. ALL EXCESS ADHESIVE VISIBLE ON THE SURFACE OF THE COMPLETED ASSEMBLY SHALL BE REMOVED USING AN APPROPRIATE CLEANING MATERIAL.

OR

c. METAL CLADDING, COMPRISED OF COATED SHEET METAL, WITH ALL EXTERNAL JOINTS AND FIXING MADE WEATHER–PROOF WITH SILICONE SEALANT.

C. MATERIAL:

1) TYPE P–1: MINIMUM 4 LB DENSITY MOLDED FIBERGLASS, MAXIMUM 0.24 K–FACTOR AT 75 DEG F MEAN TEMPERATURE WITH FACTORY–APPLIED FIRE–RETARDANT FOIL–SKRIM–KRAFT FACING. ALL SERVICE JACKET. SIMILAR TO OWENS–CORNING 650 ASJ.

2) TYPE P–3: MINIMUM 4 LB DENSITY MOLDED FIBERGLASS FITTING, MAXIMUM 0.23 K–FACTOR AT 75 DEG F MEAN TEMPERATURE SIMILAR TO EPOLUX HAMFAB MOLDED FITTINGS.

3) TYPE P–4: MINIMUM 1 LB DENSITY FIBERGLASS FITTING INSERTS, MAXIMUM 0.27 K–FACTOR AT 75 DEG F MEAN TEMPERATURE SIMILAR TO MANVILLE HI–LO TEMP INSULATION INSERTS.

4) TYPE P–6: MINIMUM 6 LB MOLDED FOAMED PLASTIC. MAXIMUM 0.27 K–FACTOR AT 75 DEG F MEAN TEMPERATURE. MAXIMUM 0.17 PERMEANCE. SIMILAR TO ARMSTRONG ARMAFLEX II.

D. INSTALLATION:

1) BEFORE APPLYING INSULATION ALL PRESSURE AND LEAK TESTS SHALL BE COMPLETED AND APPROVED.

2) ALL INSULATION SHALL BE BUTTED FIRMLY TOGETHER. PROVIDE 2 IN. LAMP STRIPS AT ALL SEAMS SECURED WITH ADHESIVE. USE VAPOR BARRIER TAPE AND VAPORSEAL ADHESIVE WHERE REQUIRED. STAPLES NOT PERMITTED. REFRIGERANT PIPING INSULATION SHALL HAVE MITERED FITTINGS.

3) ALL INSULATION AND VAPOR BARRIERS SHALL BE CONTINUOUS PASSING THROUGH SLEEVES, HANGERS, ETC., OR OTHER OPENINGS. PROVIDE SADDLES OR SHIELDS FOR PROTECTION AT ALL HANGINGS.

4) INSULATION FOR STRAINERS OR OTHER FITTINGS OR ACCESSORIES REQUIRING SERVICING OR INSPECTION SHALL HAVE INSULATION REMOVABLE AND REPLACEABLE WITHOUT DAMAGE.

SHEET HISTORY SCHEDULE

| | | |
|---|---|---|
| | | |
| | | |
| | | |
| | | |
| | | |

ISSUE DATE: 10/16/2024 12:02:18 PM

RENOVATION BUILT -OUT

ZEITLIN'S DELICATESSEN

DRAWN BY: NYE

QAQC: NYE

APPROVED BY: NYE

PROJECT NUMBER: 2432

MECHANICAL SPECIFICATIONS

M0.2

Property of NY Engineers

## GENERAL NOTES

A. ALL WORK SHALL COMPLY WITH ALL LOCAL CODE & STATE CODE & AUTHORITIES HAVING JURISDICTION.
B. COORDINATE LOCATIONS AND SIZES OF ROOF OPENINGS WITH OWNER AND STRUCTURAL ENGINEERS.
C. EQUIPMENT SIZES, DIMENSIONS AND REQUIRED CONNECTIONS SHALL BE VERIFIED WITH THE ACTUAL EQUIPMENT SELECTED VENDOR DRAWINGS BEFORE FABRICATION OF DUCTWORK, PIPING ETC.
D. CONTRACTOR SHALL COORDINATE ALL ELECTRICAL REQUIREMENTS FOR ALL HVAC BASED ON ACTUAL EQUIPMENT SELECTED PRIOR TO INSTALLATION.
E. CONTRACTOR SHALL COORDINATE EQUIPMENT WEIGHTS AND SUPPORTS BASED ON ACTUAL EQUIPMENT SELECTED.
F. TEST AND BALANCE AIR SYSTEMS. PROVIDE REPORT TO G.C AND OWNER.
G. CONTRACTOR TO FIELD VERIFY EXISTING DUCTWORK, ASSOCIATED ACCESSORIES AND EXISTING HVAC EQUIPMENT. ALL EXISTING DUCTWORK, ASSOCIATED ACCESSORIES AND EXISTING HVAC EQUIPMENT TO BE REUSED.
H. ALL ITEMS TO BE RE-USED OR RELOCATED SHALL BE CLEANED, REPAIRED, AND RESTORED TO LIKE NEW CONDITION PRIOR TO RE-USE.
I. PROVIDE NECESSARY PROTECTIVE DEVICES WHERE REQUIRED AND IN STRICT ACCORDANCE WITH OSHA AND ICRA REGULATIONS.
J. KEEP ALL ADJOINING AREAS ADJACENT TO THE WORK AREAS CLEAN AND FREE OF DEBRIS.
K. MATERIAL FROM EXISTING SYSTEM WHICH IS RENDERED USELESS SHALL BE REMOVED AND DISPOSED OF OFF SITE.
L. REPAIR/ REPLACE EXISTING EQUIPMENT/ MATERIALS NOT SCHEDULED OR NOTED TO BE DEMOLISHED BUT BECOME DAMAGED DURING THE PROGRESS OF THE WORK. MAKE ANY AND ALL SUCH REPAIRS, REPLACEMENTS, MODIFICATIONS TO RESTORE THE DAMAGED ITEMS TO THEIR ORIGINAL CONDITIONS AT THE TIME OF DAMAGE, TO THE SATISFACTION OF AND AT NO ADDITIONAL COST TO THE OWNER. DUCT SIZES SHOWN ON DRAWINGS ARE CLEAR INSIDE DIMENSION.
M. THE CONTRACTOR SHALL VERIFY EXACT LOCATION OF TRUSSES AND MODIFY DUCTWORK ACCORDINGLY.
N. PROVIDE FIRE OR FIRE+SMOKE DAMPER WHEREVER DUCTS ARE CROSSING FIRE/SMOKE RATED WALLS/BARRIERS/SLABS. COORDINATE WITH ARCHITECTURAL DRAWING FOR FIRE RATING OF THE WALLS.
O. DUCT TO EXHAUST FAN CONNECTIONS SHALL BE FLANGED, GASKETED AND BOLTED TO THE INLET OF THE FAN FOR SIDE-INLET UTILITY FANS APPROVED FLEXIBLE CONNECTIONS MAY BE PROVIDED.
P. ALL WORK SHALL BE SUBJECT TO THE ACCEPTANCE AND APPROVAL OF THE ARCHITECT AND OWNER. THE ARCHITECT SHALL BE NOTIFIED OF ANY AND ALL DISCREPANCIES BETWEEN FIELD CONDITIONS AND THE CONTRACT DOCUMENTS BEFORE PROCEEDING WITH THAT PORTION OF THE WORK. FAILURE OF PROPER NOTIFICATION DOES NOT RELIEVE THE CONTRACTOR. THE CONTRACTOR SHALL CORRECT ANY AND ALL WORK ARISING FROM SUCH FAILURE TO COORDINATE DISCREPANCIES TO THE SATISFACTION OF THE ARCHITECT WITHOUT ADDITIONAL COST TO THE OWNER.
Q. THE CONTRACTOR SHALL, UPON COMPLETION OF PROJECT, PERFORM A COMPLETE TEST AND BALANCE OF ALL EQUIPMENT. PROVIDE A WRITTEN REPORT TO THE ARCHITECT. ALL CAPACITIES MUST BE SET TO WITHIN ±10% OF AMOUNTS INDICATED ON THE FLOOR PLAN AND SCHEDULES.
R. PROVIDE CORD OPERATED DAMPERS FOR AIR TERMINALS MOUNTED IN INACCESSIBLE CEILINGS.
S. PROVIDE DUCT INSULATION AS SPECIFIED WITH MINIMUM VALUES AS FOLLOWS:
   R-6 SUPPLY & RETURN DUCT INSULATION IN UNCONDITIONED SPACES WITHIN BUILDING.
   R-12 SUPPLY & RETURN DUCT INSULATION WITHIN BUILDING ENVELOPE ASSEMBLY.
   R-12 SUPPLY & RETURN DUCT INSULATION OUTSIDE OF BUILDING.
T. EXISTING VENT FROM HOT WATER HEATER TO REMAIN. CONTRACTOR TO FIELD VERIFY THE EXACT LOCATION OF EXISTING WATER HEATER.

## KITCHEN EXHAUST NOTES

1. ALL TYPE I GREASE DUCT SHALL BE WRAPPED WITH TWO LAYERS OF 3M™ FIRE BARRIER DUCT WRAP 615+ DUCT ENCLOSURE SYSTEM PROVIDING 2-HOUR FIRE RESISTANT PROTECTION. WRAP SHALL CONSIST OF 3" PERIMETER AND LONGITUDINAL OVERLAPS WITH ZERO CLEARANCE TO COMBUSTIBLES. DUCT WRAP SHALL COMPLY WITH THE REQUIREMENTS OF NFPA 96 AND ICC-ES EVALUATION REPORT NO. ESR-1255. DUCT WRAP IS UL LISTED. DUCT WRAP SHALL BE INSTALLED IN ACCORDANCE WITH THE MANUFACTURER'S INSTALLATION INSTRUCTIONS.
2. MATERIAL – STEEL NOT LESS THAN 0.055 INCH (NO. 16 GAGE) IN THICKNESS, WITH JOINTS AND SEAMS MADE WITH A CONTINUOUS LIQUID-TIGHT WELD MADE ON THE EXTERNAL SURFACE OF THE DUCT SYSTEM.
3. ALL TURNS IN KITCHEN EXHAUST DUCT SHALL BE ACHIEVED WITH THE USE OF A 1.5 RADIUS/WIDTH SMOOTH RADIUS ELBOW. REFERENCE DETAILS.
4. HORIZONTAL DUCT SERVING TYPE I HOODS SHALL BE SLOPED NOT LESS THAN 2% TOWARD HOOD.
5. A PERFORMANCE TEST SHALL BE CONDUCTED UPON COMPLETION AND BEFORE FINAL APPROVAL OF THE INSTALLATION OF A VENTILATION SYSTEM SERVING COMMERCIAL COOKING APPLIANCES. THE TEST SHALL VERIFY THE RATE OF EXHAUST AIRFLOW, MAKEUP AIRFLOW, AND PROPER OPERATION AS SPECIFIED IN THE MECHANICAL CODE (INCLUDING CAPTURE AND CONTAINMENT TEST). THE PERMIT HOLDER SHALL FURNISH THE NECESSARY TEST EQUIPMENT AND DEVICES REQUIRED TO PERFORM THE TESTS. COORDINATE ALL TESTS WITH AHJ, INCLUDING FINAL REPORT/SUBMITTAL AND WITNESS REQUIREMENTS.
6. SLOPE ALL HORIZONTAL GREASE DUCT 1" PER FOOT WHERE SPACE ALLOWS, BUT NOT LESS THAN 1/4" PER FOOT AS REQUIRED BY AHJ.
7. CONTRACTOR TO PROVIDE AND INSTALL ALL CODE REQUIRED FIRE RATED ACCESS DOORS IN GREASE DUCTS AT ALL LOCATIONS REQUIRED BY CODE AND LOCAL AUTHORITY HAVING JURISDICTION.
8. PROVIDE CLEANOUTS IN ALL KITCHEN EXHAUST DUCTWORK AT EVERY CHANGE OF DIRECTION AND AT EVERY 12' OF DUCT. PROVIDE ACCESS PANELS AT ALL GREASE DUCT CLEANOUTS. PROVIDE AS PER LOCAL CODE.
9. COORDINATE HOOD INSTALLATION WITH HOOD PLANS. HOOD OPERATION, CAPTURE, SIZE AND ACCESSORIES ARE BASED ON EQUIPMENT AND CLEARANCES INDICATED IN PLANS. FIELD VERIFY AND COORDINATE HOODS WITH EQUIPMENT FURNISHED. COORDINATE HOOD CONNECTIONS WITH HOOD PLANS AND MANUFACTURER PRIOR TO FABRICATION.
10. COORDINATE INTERLOCKS AND HOOD CONTROLS WITH HOOD PLANS AND HOOD MANUFACTURER PRIOR TO INSTALLATION.
11. GREASE DUCT SYSTEMS SERVING A TYPE I HOOD SHALL HAVE A CLEARANCE TO COMBUSTIBLE CONSTRUCTION OF NOT LESS THAN 18 INCHES.

IMPORTANT NOTE:

PROVIDE COPY OF TEST AND BALANCE REPORT TO MECHANICAL INSPECTOR AT TIME OF HAVING FINAL INSPECTION

## KEY NOTES

1. EXISTING DIFFUSERS AND GRILLES FROM EXISTING RTU TO REMAIN AS IS. RELOCATE AS/IF REQUIRED AS PER NEW RCP. CONTRACTOR TO FIELD VERIFY EXACT LOCATION. IF DAMAGED, REPLACE WITH SIMILAR KIND. PROVIDE VOLUME DAMPER OR COLLAR DAMPER, VERIFY IN FIELD PRIOR TO BID.
2. EXISTING SUPPLY/RETURN/EXHAUST DIFFUSERS TO BE RELOCATED AS SHOWN. VERIFY SIZE, LOCATION AND COORDINATE WITH ARCHITECTURAL SHEETS INCLUDING REFLECTED CEILING PLAN FOR RELOCATIONS. CLEAN AND REFURBISH TO "LIKE NEW" CONDITION. EXTEND/MODIFY DUCTWORK AS REQUIRED AT RELOCATED DIFFUSERS. PROVIDE VOLUME DAMPER OR COLLAR DAMPER, VERIFY IN FIELD PRIOR TO BID. EXTEND EXISTING FLEX/METAL DUCTWORK AS/IF REQUIRED DUE TO RELOCATION OF THE DIFFUSERS.
3. PROVIDE NEW SUPPLY/RETURN DIFFUSERS AS SHOWN. EXTEND EXISTING FLEXIBLE OR METAL DUCTWORK, AND PROVIDE NEW DUCTWORK AS NECESSARY TO CONNECT THE DIFFUSERS TO THE EXISTING RTU.
4. ALL EXISTING DUCTWORK TO REMAIN AS IS. CONTRACTOR TO VERIFY SIZES AND CONDITION OF DUCTWORK. REPAIR, EXTEND, DISCONNECT, OR CONNECT NEW DUCTWORK AS NEEDED. INSULATE DUCTWORK PER ENERGY CODE. IN OPEN CEILING AREAS, INSULATION AND DUCTWORK TO BE COLORED PER ARCHITECT/OWNER CONFIRMATION.
5. REUSE & RELOCATE EXISTING THERMOSTAT IF IT IS IN GOOD CONDITION. IF NOT OPERABLE, PROVIDE 7-DAY PROGRAMMABLE THERMOSTAT AND RELATED WIRING TO CONTROL RTU. MOUNT 48" AFF. PROVIDE LOCKABLE COVER. RELOCATE AS/IF REQUIRED. CONFIRM & COORDINATE FINAL LOCATION WITH ARCHITECT/OWNER.
6. INSTALL TYPE-I GREASE EXHAUST HOOD. SUPPORT HOOD PER MANUFACTURER'S INSTALLATION INSTRUCTIONS. PROVIDE TRAPEZE HANGERS FOR ALL THREAD SUPPORT UNDER DUCTWORK AS REQUIRED. TRANSITION FROM HOOD CONNECTION TO WELDED KITCHEN EXHAUST DUCT SIZES SHOWN. THE HOOD AND DUCT SHALL HAVE AN APPROVED FIRE PROTECTION. THE FIRE-EXTINGUISHING SYSTEM SHALL BE INTERCONNECTED TO THE FUEL OR CURRENT SUPPLY SO THAT THE FUEL OR CURRENT SUPPLY IS AUTOMATICALLY SHUT OFF TO ALL EQUIPMENT UNDER THE HOOD WHEN THE SYSTEM IS ACTUATED.
7. 24"x12" MAKE-UP AIR DUCT CONNECTION TO HOOD. PROVIDE VOLUME DAMPER TO BALANCE THE AIRFLOW.
8. 18"ø GREASE EXHAUST DUCT FROM HOOD UP THRU ROOF TO KEF-1(N).
9. REUSE EXISTING REMOTE TEMP. SENSORS MOUNTED IN RETURN AIR DUCT. PROVIDE NEW IF EXISTING TEMP. SENSOR IS DAMAGED OR NOT WORKING PROPERLY.
10. REUSE EXISTING SMOKE DETECTOR. IF EXISTING SMOKE DETECTOR IS NOT IN GOOD CONDITION TO REUSE, THEN INSTALL NEW ONE. SMOKE DETECTOR SHALL BE FURNISHED/INSTALLED BY MECHANICAL CONTRACTOR & WIRED BY ELECTRICAL CONTRACTOR TO SHUT DOWN CORRESPONDING RTU UNDER ALARM CONDITIONS. THE DETECTORS SHALL BE CONNECTED TO THE ALARM SYSTEM OR DEDICATED FUNCTION ALARM SYSTEM AND GENERATE A SUPERVISORY NOTIFICATION.
11. EXISTING TOILET EXHAUST SYSTEM TO REMAIN AS IS.
12. PROVIDE AND INSTALL EMERGENCY MANUAL SHUTDOWN PUSH BUTTON FOR HOOD. PUSH BUTTON SHALL BE IN THE PATH OF EGRESS, A MINIMUM OF 10' AWAY FROM THE HOOD AND A MAXIMUM OF 20'.
13. GREASE DUCT TO BE PROVIDED WITH KITCHEN EQUIPMENT AND INSTALLED BY MECHANICAL CONTRACTOR. INSTALL PER MANUFACTURER'S INSTRUCTIONS.
14. EXTEND MAKE-UP AIR DUCT FROM HOOD COLLAR UP TO MOUNTED MAKE-UP AIR UNIT ON ROOF MAU-1(N).
15. FURNISH AND INSTALL AIR CURTAIN AS SCHEDULED ABOVE DOOR. UNIT TO BE INSTALLED TO ACCOMMODATE MANUFACTURER'S RECOMMENDED SERVICE AND OPERATION CLEARANCE REQUIREMENTS.
16. PROVIDE NEW 7-DAY PROGRAMMABLE THERMOSTATS AND RELATED WIRING TO CONTROL AHU-1(N). MOUNT 48" AFF. PROVIDE LOCKABLE COVER. CONFIRM & COORDINATE FINAL LOCATION WITH ARCHITECT/OWNER.
17. AHU-1(N) MUST SHUT DOWN WITH FIRE SUPPRESSION SYSTEM ACTIVATION. AHU-1(N) TO BE INTERLOCK WITH HOOD.
18. CONTRACTOR TO PROVIDE REMOTE TEMPERATURE SENSOR IN RETURN AIR PATH & WIRE BACK TO T-STAT FOR AHU-1(N).
19. CONNECT CONDENSATE DRAIN FROM AHU-1(N) TO NEAREST PLUMBING DRAIN WITH AIR GAP FITTING . PROVIDE CONDENSATE DRAIN PUMP IF REQUIRED. PROVIDE SECONDARY DRAIN PAN WITH WATER LEAK BUG SENSOR TO SHUT DOWN THE UNIT IN CASE OF LEAKAGE. PROVIDE HORIZONTAL SLOPE IN THE DIRECTION OF DISCHARGE OF NOT LESS TAN 1/8 UNIT VERTICAL IN 12 UNITS HORIZONTAL.
20. AHU-1(N) TO BE INTERLOCK WITH RTU TO ENSURE NO SIMULTANEOUS HEATING AND COOLING. AHU-1(N) TO RUN ONLY WHEN RTU IN COOLING MODE.
21. EXISTING DUCTWORK TO REMAIN. CONTRACTOR SHALL CLEAN AND REFURBISH TO "LIKE NEW" CONDITION. VERIFY EXACT LOCATION AND SIZE IN FIELD, BALANCE CFM'S. PROVIDE A VOLUME DAMPER OR COLLAR DAMPER IF THE EXISTING ONE IS DAMAGED, PATCH AND SEAL DUCTWORK AIRTIGHT. INSPECT, PATCH, REPAIR, AND/OR REPLACE INSULATION AS REQUIRED. CONTRACTOR TO VERIFY IN FIELD PRIOR TO BID.
22. PROVIDE 8"X6" DOOR GRILLE.

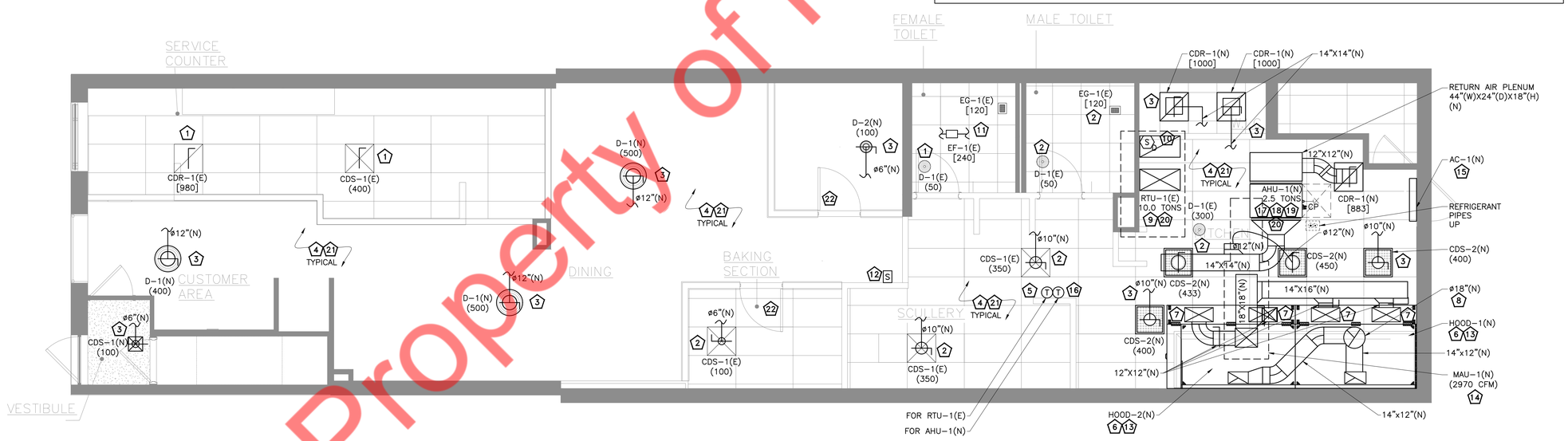


1 MECHANICAL FLOOR PLAN
M2.0 SCALE: 1/4" = 1'-0"

GRAPHIC SCALE: 1/4" = 1'-0"
0 4' 8' 12' 16'

Property of NY Engineers

| SHEET HISTORY SCHEDULE | |
|---|---|
| | |
| | |
| | |
| | |
| | |
| ISSUE DATE: | 10/16/2024 12:02:18 PM |

RENOVATION BUILT -OUT

**ZEITLIN'S DELICATESSEN**

| | |
|---|---|
| DRAWN BY: | NYE |
| QAQC: | NYE |
| APPROVED BY: | NYE |
| PROJECT NUMBER: | 2432 |

MECHANICAL FLOOR PLAN

**M2.0**

## THERMOSTATIC CONTROLS:

C403.4.1 THERMOSTATIC CONTROLS

THE SUPPLY OF HEATING AND COOLING ENERGY TO EACH ZONE SHALL BE CONTROLLED BY INDIVIDUAL THERMOSTATIC CONTROLS CAPABLE OF RESPONDING TO TEMPERATURE WITHIN THE ZONE. WHERE HUMIDIFICATION OR DEHUMIDIFICATION OR BOTH IS PROVIDED, NOT FEWER THAN ONE HUMIDITY CONTROL DEVICE SHALL BE PROVIDED FOR EACH HUMIDITY CONTROL SYSTEM.

EXCEPTION: INDEPENDENT PERIMETER SYSTEMS THAT ARE DESIGNED TO OFFSET ONLY BUILDING ENVELOPE HEAT LOSSES, GAINS OR BOTH SERVING ONE OR MORE PERIMETER ZONES ALSO SERVED BY AN INTERIOR SYSTEM PROVIDED THAT BOTH OF THE FOLLOWING CONDITIONS ARE MET:

1.THE PERIMETER SYSTEM INCLUDES NOT FEWER THAN ONE THERMOSTATIC CONTROL ZONE FOR EACH BUILDING EXPOSURE HAVING EXTERIOR WALLS FACING ONLY ONE ORIENTATION (WITHIN ± 45 DEGREES) (0.8 RAD) FOR MORE THAN 50 CONTIGUOUS FEET (15 240 MM).

2.THE PERIMETER SYSTEM HEATING AND COOLING SUPPLY IS CONTROLLED BY THERMOSTATS LOCATED WITHIN THE ZONES SERVED BY THE SYSTEM.

C403.4.1.2 DEADBAND

WHERE USED TO CONTROL BOTH HEATING AND COOLING, ZONE THERMOSTATIC CONTROLS SHALL BE CONFIGURED TO PROVIDE A TEMPERATURE RANGE OR DEADBAND OF NOT LESS THAN 5°F (2.8°C) WITHIN WHICH THE SUPPLY OF HEATING AND COOLING ENERGY TO THE ZONE IS SHUT OFF OR REDUCED TO A MINIMUM.

EXCEPTIONS:

1.THERMOSTATS REQUIRING MANUAL CHANGEOVER BETWEEN HEATING AND COOLING MODES.

2.REQUIRING PRECISION IN INDOOR TEMPERATURE CONTROL AS APPROVED BY THE CODE OFFICIAL.

C403.4.1.3 SETPOINT OVERLAP RESTRICTION

WHERE A ZONE HAS A SEPARATE HEATING AND A SEPARATE COOLING THERMOSTATIC CONTROL LOCATED WITHIN THE ZONE, A LIMIT SWITCH, MECHANICAL STOP OR DIRECT DIGITAL CONTROL SYSTEM WITH SOFTWARE PROGRAMMING SHALL BE CONFIGURED TO PREVENT THE HEATING SETPOINT FROM EXCEEDING THE COOLING SETPOINT AND TO MAINTAIN A DEADBAND IN ACCORDANCE WITH SECTION C403.4.1.2.

C403.4.2 OFF–HOUR CONTROLS

EACH ZONE SHALL BE PROVIDED WITH THERMOSTATIC SETBACK CONTROLS THAT ARE CONTROLLED BY EITHER AN AUTOMATIC TIME CLOCK OR PROGRAMMABLE CONTROL SYSTEM.

EXCEPTIONS:

1.ZONES THAT WILL BE OPERATED CONTINUOUSLY.

2.ZONES WITH A FULL HVAC LOAD DEMAND NOT EXCEEDING 6,800 BTU/H (2 KW) AND HAVING A MANUAL SHUTOFF SWITCH LOCATED WITH READY ACCESS.

C403.4.2.1 THERMOSTATIC SETBACK

THERMOSTATIC SETBACK CONTROLS SHALL BE CONFIGURED TO SET BACK OR TEMPORARILY OPERATE THE SYSTEM TO MAINTAIN ZONE TEMPERATURES DOWN TO 55°F (13°C) OR UP TO 85°F (29°C).

C403.4.2.2 AUTOMATIC SETBACK AND SHUTDOWN

AUTOMATIC TIME CLOCK OR PROGRAMMABLE CONTROLS SHALL BE CAPABLE OF STARTING AND STOPPING THE SYSTEM FOR SEVEN DIFFERENT DAILY SCHEDULES PER WEEK AND RETAINING THEIR PROGRAMMING AND TIME SETTING DURING A LOSS OF POWER FOR NOT FEWER THAN 10 HOURS. ADDITIONALLY, THE CONTROLS SHALL HAVE A MANUAL OVERRIDE THAT ALLOWS TEMPORARY OPERATION OF THE SYSTEM FOR UP TO 2 HOURS; A MANUALLY OPERATED TIMER CONFIGURED TO OPERATE THE SYSTEM FOR UP TO 2 HOURS; OR AN OCCUPANCY SENSOR.

C403.4.2.3 AUTOMATIC START

AUTOMATIC START CONTROLS SHALL BE PROVIDED FOR EACH HVAC SYSTEM. THE CONTROLS SHALL BE CONFIGURED TO AUTOMATICALLY ADJUST THE DAILY START TIME OF THE HVAC SYSTEM IN ORDER TO BRING EACH SPACE TO THE DESIRED OCCUPIED TEMPERATURE IMMEDIATELY PRIOR TO SCHEDULED OCCUPANCY.

## GENERAL NOTES

A. COORDINATE LOCATIONS AND SIZES OF ROOF OPENINGS WITH OWNER AND STRUCTURAL ENGINEERS.
B. EQUIPMENT SIZES, DIMENSIONS AND REQUIRED CONNECTIONS SHALL BE VERIFIED WITH THE ACTUAL EQUIPMENT SELECTED VENDOR DRAWINGS BEFORE FABRICATION OF DUCTWORK, PIPING ETC.
C. CONTRACTOR SHALL COORDINATE ALL ELECTRICAL REQUIREMENTS FOR ALL HVAC BASED ON ACTUAL EQUIPMENT SELECTED PRIOR TO INSTALLATION.
D. CONTRACTOR SHALL COORDINATE EQUIPMENT WEIGHTS AND SUPPORTS BASED ON ACTUAL EQUIPMENT SELECTED.
E. ALL SOURCE OF MECHANICAL INTAKE SHALL MAINTAIN 15 LINEAR FEET SEPARATION BETWEEN ANY SOURCE OF EXHAUST. CONTRACTOR IS RESPONSIBLE TO ADJUST DUCT LENGTH AS NEEDED. NOTIFY ENGINEER IF ANY DISCREPANCIES.
F. THE CONTRACTOR SHALL VERIFY EXACT LOCATION OF TRUSSES AND MODIFY DUCTWORK ACCORDINGLY.

## KEY NOTES

1. COORDINATE FINAL LOCATION OF EQUIPMENT WITH STRUCTURAL ENGINEER/DRAWINGS.
2. CONTRACTOR TO COORDINATE THE FINAL LOCATION OF EXISTING RTU ON ROOF. SET OUTSIDE AIR AS INDICATED ON RTU SCHEDULE.
3. CONDENSATE DRAIN FROM EXISTING RTU TO REMAIN AS IS. CONTRACTOR TO FLUSH THE EXISTING DRAIN LINES.
4. PROVIDE MAKE–UP AIR UNIT AND ROOF CURB. PROVIDE FLEXIBLE CONNECTION ON THE SUPPLY DUCT CONNECTION TRANSITION TO DUCT SIZE INDICATED.
5. PROVIDE ROOF MOUNTED GREASE EXHAUST FAN. MAINTAIN A MINIMUM OF 15'–0" FROM ALL OUTSIDE AIR INTAKES.
6. EXISTING TOILET EXHAUST DUCT UP THROUGH ROOF WITH GOOSENECK & WIRE–MESH TO REMAIN AS IS. MAINTAIN A MINIMUM OF 15'–0" FROM ALL OUTSIDE AIR INTAKES.
7. CONTRACTOR TO RUN CONDENSATE DRAIN FROM MAU TO NEAREST ROOF DRAIN.
8. PROVIDE 3' TALL WIND BAND FOR EXHAUST FAN. COORDINATE INSTALLATION OF FAN & EXISTING CONDITIONS WITH LANDLORD TO ENSURE THAT EXHAUST OUTLETS SHALL BE LOCATED NOT LESS THAN 15' HORIZONTALLY FROM OR NOT LESS THAN 3' ABOVE AIR INTAKE SOURCE.
9. INSTALL NEW REFRIGERANT PIPING BETWEEN INDOOR AND OUTDOOR UNIT AS PER MANUFACTURER'S RECOMMENDATION. PROVIDE WEATHER PROOF COATING FOR EXPOSED PIPING. PROVIDE INSULATION TO REFRIGERANT PIPING AS PER ENERGY CONSERVATION CODE.
10. CONTRACTOR TO INSTALL OUTDOOR CONDENSING UNIT ON 4" CONCRETE PAD. PROVIDE VIBRATION ISOLATOR.
11. CONTRACTOR TO FIELD VERIFY THAT THE LOCATION OF ANY EXHAUST SOURCE SHOULD BE AT LEAST 15' AWAY FROM THE OUTSIDE AIR INTAKE OPENING OF RTU & MAU.

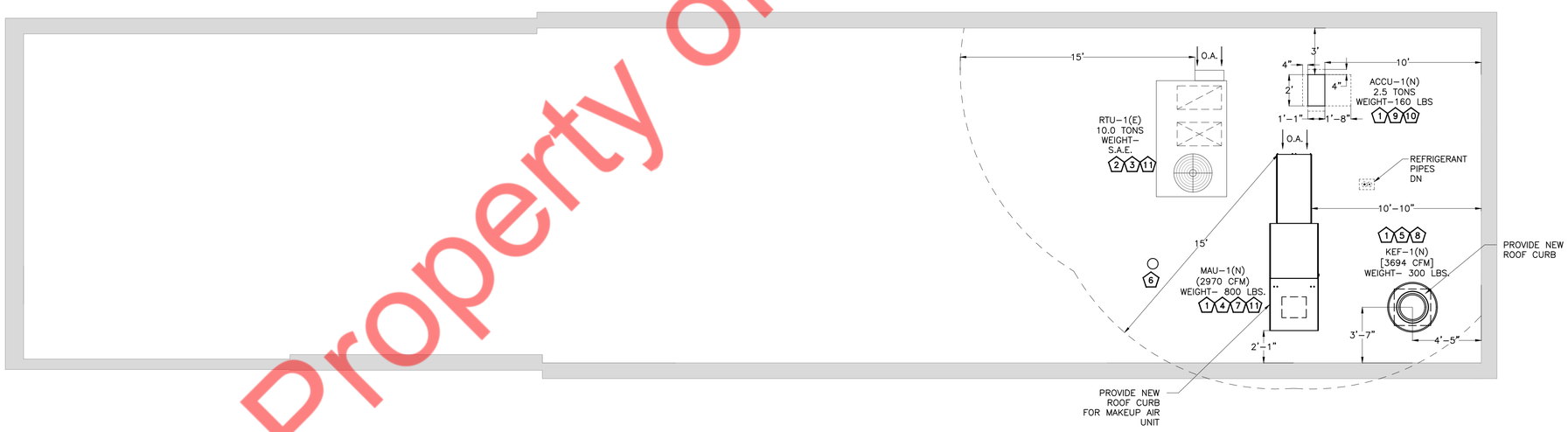


1 M2.1 MECHANICAL ROOF PLAN
SCALE: 1/4" = 1'–0"

GRAPHIC SCALE: 1/4" = 1'-0"
0 4' 8' 12' 16'

Property of NY Engineers

SHEET HISTORY SCHEDULE

| | |
|---|---|
| ISSUE DATE: | 10/16/2024 12:02:18 PM |

RENOVATION BUILT -OUT

ZEITLIN'S DELICATESSEN

| | |
|---|---|
| DRAWN BY: | NYE |
| QAQC: | NYE |
| APPROVED BY: | NYE |
| PROJECT NUMBER: | 2432 |

MECHANICAL ROOF PLAN & THERMOSTATIC NOTES

M2.1

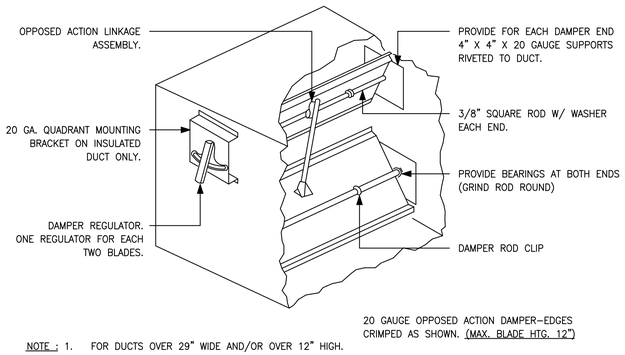


NOTE : 1. FOR DUCTS OVER 29" WIDE AND/OR OVER 12" HIGH.

1 / M3.0 LOW PRESSURE BALANCING DAMPER
N.T.S

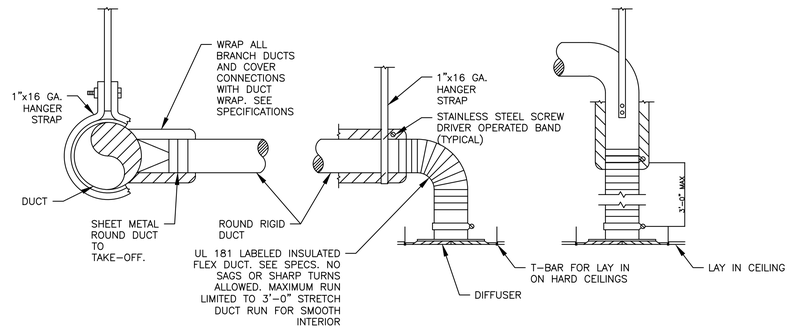


NOTES:

1. ALL JOINTS, SEAMS ANS CONNECTIONS FOR DUCTS WILL BE IN ACCORDANCE WITH SECTION C403.2.9 OF FBCEC 2020 AND SECTION 603 OF FBCM 2020

2 / M3.0 TYPICAL DIFFUSER CONNECTION DETAIL
N.T.S

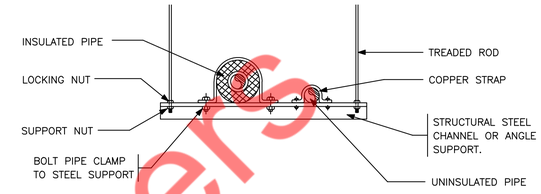


TYPICAL TRAPEZE HANGER SUPPORT

PIPE HANGER ROD AND SPACING SCHEDULE

| | | | | | | | |
|---|---|---|---|---|---|---|---|
| NOMINAL PIPE OR TUBE SIZE – INCHES | 5/8 | 3/4 | 7/8 | 1 | 1 1/2 | 2 | 2 1/2 |
| HANGER ROD SIZES INCHES | 3/8 | 3/8 | 3/8 | 3/8 | 3/8 | 3/8 | 3/8 |
| MAX. SPACING BETWEEN PIPE SUPPORTS – FEET | – | 6 | – | 7 | 9 | 10 | 11 |
| MAX. SPACING BETWEEN CU. TUBE SUPPORTS–FT. | 6 | 6 | 6 | 6 | 8 | 9 | 10 |

NOTES : TRAPEZE HANGER SPACING SHALL BE BASED ON SPACING OF SMALLEST PIPE ON TRAPEZE. TRAPEZE SHALL BE DESIGNED WITH A FACTOR OF SAFETY OF 5 FOR CENTER OF SPAN CONCENTRATED LOAD.

3 / M3.0 METHOD OF HANGING REFRIGERANT PIPING
N.T.S

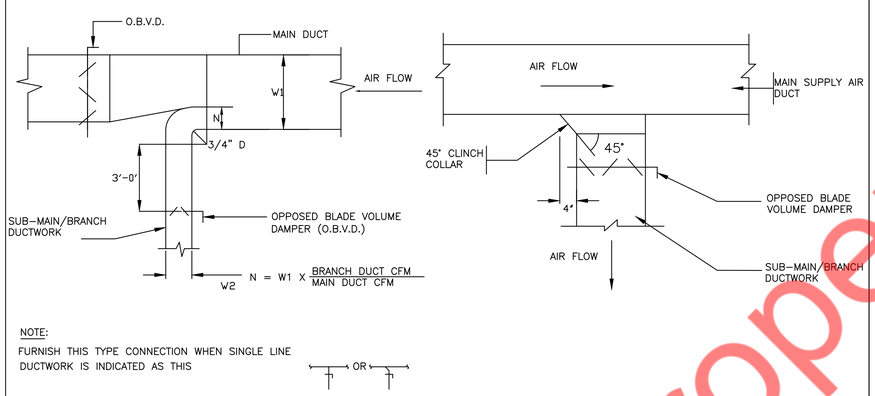


NOTE:

FURNISH THIS TYPE CONNECTION WHEN SINGLE LINE DUCTWORK IS INDICATED AS THIS




4 / M3.0 SUPPLY AIR DUCTWORK SUB–MAIN/BRANCH DUCT CONNECTION
N.T.S

NOTES:

DUCTS TO BE ACOUSTICALLY LINED SHALL BE DESIGNATED BY THE SYMBOL IN FIG. "C" TO THE EXTENT OF LINING. THICKNESS SHALL BE AS SPECIFIED.

DUCTS LINED WITH ACOUSTICAL MATERIAL SHOULD BE FASTENED WITH CLIPS, ADHESIVE, OR PINS

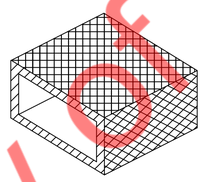

FIG. A

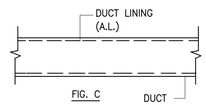


FIG. C

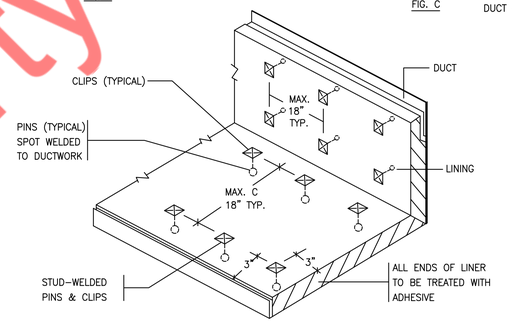


FIG. B

5 / M3.0 ACOUSTICAL TREATMENT DUCT LINING
N.T.S

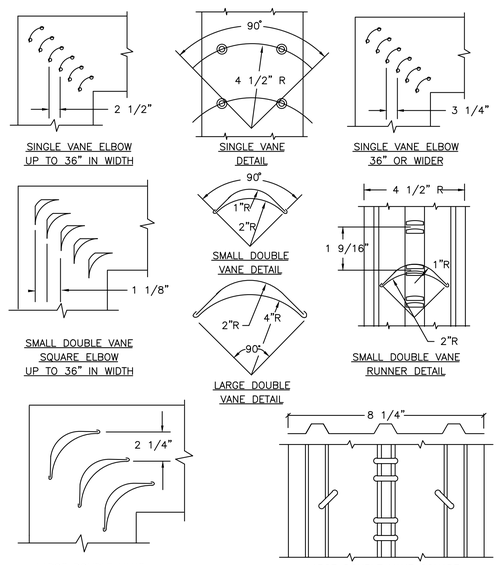


6 / M3.0 LOW VELOCITY DUCTWORK ELBOWS
N.T.S

SHEET HISTORY SCHEDULE

| | |
|---|---|
| ISSUE DATE: | 10/16/2024 12:02:18 PM |

RENOVATION BUILT -OUT

ZEITLIN'S DELICATESSEN

| | |
|---|---|
| DRAWN BY: | NYE |
| QAQC: | NYE |
| APPROVED BY: | NYE |
| PROJECT NUMBER: | 2432 |

MECHANICAL DETAILS (1 OF 2)

M3.0

Property of NY Engineers

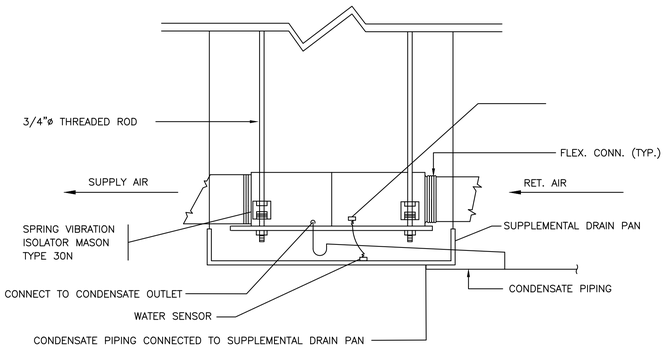


1 / M3.1 AHU INSTALLATION DETAILS
N.T.S

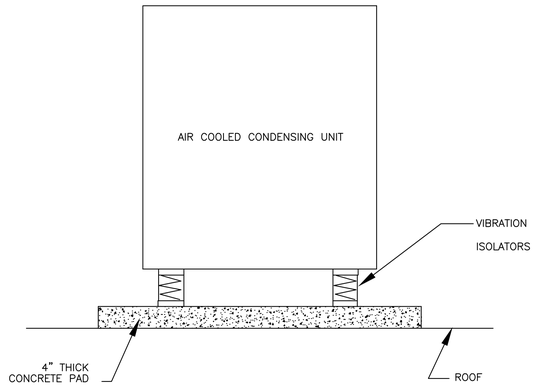


2 / M3.1 CONDENSING UNIT MOUNTING DETAIL
N.T.S

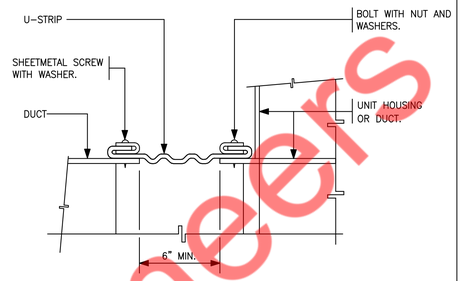


3 / M3.1 FLEXIBLE CONNECTION (DUCT-EQUIPMENT)
N.T.S

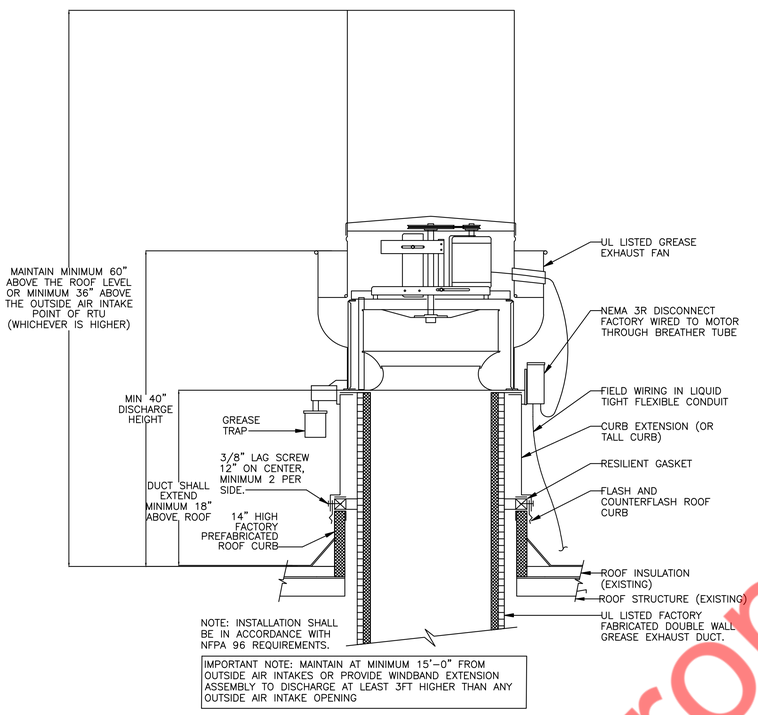


4 / M3.1 ROOF MOUNTED KITCHEN EXHAUST FAN DETAIL
N.T.S

Property of NY Engineers

SHEET HISTORY SCHEDULE

| | | |
|---|---|---|
| | | |
| | | |
| | | |
| | | |
| | | |

ISSUE DATE: 10/16/2024 12:02:18 PM

RENOVATION BUILT -OUT

ZEITLIN'S DELICATESSEN

| | |
|---|---|
| DRAWN BY: | NYE |
| QAQC: | NYE |
| APPROVED BY: | NYE |
| PROJECT NUMBER: | 2432 |

MECHANICAL DETAILS (2 OF 2)

M3.1

## EXISTING ROOF TOP UNIT SCHEDULE

| UNIT ID | MANUFACTURER | MODEL | NOMINAL TONS | SUPPLY FAN DATA | | | GAS HEAT | | COOLING DATA | | | | | ELECTRICAL DATA | | | | EER | SEER | THERMAL EFFICIENCY (%) | OPERATING WEIGHT (LBS) | REMARK |
|---|---|---|---|---|---|---|---|---|---|---|---|---|---|---|---|---|---|---|---|---|---|---|
| | | | | TOTAL SUPPLY | OUTSIDE AIR | EXTERNAL STATIC | INPUT | OUTPUT | TOTAL | SENSIBLE | AMBIENT TEMP. | ENTERING TEMP. | STAGES | VOLTS | PHASE | MCA(A) | MOCP(A) | | | | | |
| | | | | CFM | CFM | PRESSURE (IN. W.G.) | MBH | MBH | MBH | MBH | DB (°F) | DB / WB(°F) | | | | | | | | | | |
| RTU-1(E) | TRANE | YSC120H3EHA030 (V.I.F.) | 10 | 4000 (V.I.F.) | 1020 | S.A.E | 235 (V.I.F.) | 188 (V.I.F.) | S.A.E | S.A.E | S.A.E | S.A.E | S.A.E | 208-230 | 3 | 48.3 (V.I.F.) | 60 (V.I.F.) | S.A.E | S.A.E | S.A.E | S.A.E | EXISTING |

**NOTES :**

1. S.A.E :- SAME AS EXISTING, V.I.F:- VERIFY IN FIELD.
2. EXISTING RTU WITH ALL ACCESSORIES TO REMAIN SAME AND TO BE REUSED.
3. CONTRACTOR TO CONFIRM IF EXISTING RTU IS WORKING AT 100% RATED CAPACITY.
4. CONTRACTOR TO FIELD VERIFY EXACT LOCATION AND CONFIGURATION OF RTU ON SITE.
5. IF REQUIRED, PROVIDE NEW THERMOSTATS COMPATIBLE WITH EXISTING RTU. COORDINATE FINAL LOCATION WITH ARCHITECT/OWNER.
6. CONTRACTOR TO REBALANCE OUTSIDE AIR & RETURN AIR DAMPERS ON EXISTING RTU TO MATCH VALUES MENTIONED IN ABOVE TABLE.
7. REPLACE ALL THE FILTERS, IF REQUIRED. PROVIDE MINIMUM MERV-8 FILTERS.

## AIR HANDLING UNITS (INDOOR) SCHEDULE

| UNIT ID | MANUFACTURER | MODEL | TON | SUPPLY AIR CFM | OUTSIDE | EXTERNAL STATIC | COOLING DATA | | | PIPE SIZES | | | ELECTRICAL DATA | | | | DIMENSIONS (IN.) | OPERATING WEIGHT (LBS) | REMARK |
|---|---|---|---|---|---|---|---|---|---|---|---|---|---|---|---|---|---|---|---|
| | | | | | | | TOTAL | AMBIENT TEMP. | ENTERING TEMP. | DRAIN | GAS PIPE OD | LIQUID PIPE OD | VOLTS | PHASE | MCA(A) | MOCP(A) | | | |
| | | | | | AIR CFM | PRESSURE (IN. W.G.) | MBH | DB (°F) | DB / WB(°F) | IN | IN | IN | | | | | (LXWXH) | | |
| AHU-1(N) | TRANE- MITSUBISHI (OR EQUIVALENT) | TPEADA0301AA70A (OR EQUIVALENT) | 2.5 | 883 | 0 | 0.6 | 30 | 95 | 80/67 | 1 1/4 | 5/8 | 3/8 | INDOOR UNIT IS POWERED BY OUTDOOR UNIT. | | | | 43-5/16 x 28-7/8 x 9-7/8 | 70 | NEW |

**NOTES :**

1. REFRIGERANT R410 SHALL BE PROVIDED.
2. PROVIDE ALL ASSOCIATED ACCESSORIES.
3. ALL REFRIGERANT PIPING IS TO BE SIZED AS PER THE MANUFACTURER'S RECOMMENDATIONS.
4. AIRFLOW BASED ON HIGH SPEED.
5. CONTRACTOR SHALL PROVIDE A LONG LINE SET FOR REFRIGERANT PIPING IN THE EVENT THAT TOTAL REFRIGERANT.
6. PROVIDE DISCONNECT SWITCH & NON-POWERED GFI OUTLET.
7. HINGED ACCESS PANELS & EXTERNAL GAUGE PORTS/ PRESSURE RESETS.
8. PROVIDE DRAIN PAN WITH A WATER LEAK DETECTOR.

## CONDENSING UNITS (OUTDOOR) SCHEDULE

| UNIT TAG | MANUFACTURER | MODEL | LOCATION | INDOOR UNITS SERVED | CAP. TON | COMPRESSOR TYPE | UNIT DIMENSIONS IN.(WXDXH) | WEIGHT (LBS) | PIPE SIZES | | ELECTRICAL | | | SOUND LEVEL (dBA) | EER2 | SEER2 |
|---|---|---|---|---|---|---|---|---|---|---|---|---|---|---|---|---|
| | | | | | | | | | GAS PIPE OD (INCH.) | LIQUID PIPE OD (INCH.) | (V/Hz/Ph) | MCA | MOCP | | | |
| ACCU-1(N) | TRANE- MITSUBISHI (OR EQUIVALENT) | TRUYA0301HA70NA (OR EQUIVALENT) | ROOF | AHU-1(N) | 2.5 | TWIN ROTARY | 37-13/32 x 14-3/16x 37-1/8 | 160 | 5/8 | 3/8 | 208-230/60/1 | 19 | 26 | 47 | 10 | 18.5 |

**NOTES :**

1. PROVIDE LOW AMBIENT CONTROL FOR CONDENSING UNIT OPERATION DOWN TO -4°F.
2. CONDENSING UNIT TO BE MOUNTED ON CONCRETE PADS WITH VIBRATION ISOLATORS.
3. OUTDOOR REFRIGERANT LINE SET TO BE WRAPPED IN UV RESISTANT, FIRE RATED & ANTI-MICROBIAL INSULATION.
4. REFRIGERNAT LINEST PENETRATION THROUGH BUILDING EXTERIOR SEALED BY AIREX TITUS FS OR SS MODEL SERIES.
5. CONTRACTOR SHALL PROVIDE A LONG LINE SET FOR REFRIGERANT PIPING IN THE EVENT THAT TOTAL REFRIGERANT LENGTH EXCEED THE MANUFACTURER'S STANDARD RECOMMENDED LENGTH.
6. OUTDOOR CONDENSING UNITS TO BE LOCATED WITH PROPER CLEARANCES & MUST PREVENT RE-CIRCULATION OF AIR.

## MAKE UP AIR UNIT

| MAU-1(N) | SERVICE | FLOW RATE | EXTERNAL STATIC PRESSURE | SPEED | HEATING CAPACITY | | | GAS PRESSURE (IN W.C.) | FAN DATA | | | | WEIGHT (LBS) | BASIS OF DESIGN | | REMARK |
|---|---|---|---|---|---|---|---|---|---|---|---|---|---|---|---|---|
| | | | | | INPUT | OUTPUT | EFFICIENCY | | V/PH/HZ | MCA (A) | MOCP (A) | HP | | | | |
| | | CFM | IN W.G. | RPM | MBH | MBH | % | | | | | | | MANUFACTURER | MODEL | |
| MAU-1(N) | HOOD-1(N) & HOOD-2(N) | 2970 | 0.75 | 1316 | 239.642 | 220.471 | 92 | 7 -14 | 208/3/60 | 7.7 | 15 | 2.00 | 800 | ECON-AIR | EA2-D.500-20D | 1,2,3 |

**NOTES :**

1. PROVIDE ALL NECESSARY ACCESSORIES AS PER MANUFACTURER'S RECOMMENDATIONS.
2. REFER MAKE UP AIR UNIT DATA ON SHEET H1.0 TO H1.2 FOR DETAILED INFORMATION.
3. CONTRACTOR TO PROVIDE MAKE UP AIR UNIT SELECTION EQUIVALENT TO ABOVE SELECTION.

## FAN SCHEDULE

| TAG | LOCATION | QTY | FLOW RATE | STATIC PRESSURE | ELECTRIC DATA | | | NEC FLA (A) | MAXIMUM LOUDNESS | WEIGHT | BASIS OF DESIGN | | NOTES |
|---|---|---|---|---|---|---|---|---|---|---|---|---|---|
| | | | | EXTERNAL | SPEED | HP | V/HZ/PH | | | | | | |
| | | | CFM | IN W.G. | RPM | | | | SONES | LBS. | MANUFACTURER | MODEL | |
| KEF-1(N) | ROOF | 1 | 3694 | 1.5 | 1271 | 5 | 208/60/3 | 15 | 25.5 | 300 | ECON-AIR | EADU200H | 1-5 |
| EF-1(E) | RESTROOMS | 1 | 240 (V.I.F.) | S.A.E. | S.A.E. | - | S.A.E. | - | - | S.A.E. | S.A.E. | S.A.E. | 6-7 |

**NOTES :**

1. PROVIDE ROOF CURB, BACK DRAFT DAMPER, WEATHER PROOF DISCONNECT SWITCH, AMCA SEAL & UL CERTIFIED, THERMAL OVERLOAD PROTECTION.
2. CONTRACTOR TO FIELD VERIFY THE SPECIFICATION OF KITCHEN FAN WITH VENDOR
3. INTERLOCK KEF-1(N) WITH RESPECTIVE HOOD-1(N), HOOD-2(N), MAU-1(N) AND AHU-1(N) TO BE INTERLOCK WITH KEF-1(N).
4. PROVIDE WITH DISCONNECT. REFER TO ELECTRICAL PLANS FOR RATINGS & COORDINATE WITH E.C.
5. REFER MAKE UP AIR UNIT DATA ON SHEET H1.0 TO H1.2 FOR DETAILED INFORMATION.
6. EXISTING TOILET EXHAUST FAN TO REMAIN AS IS. CONTRACTOR TO CONFIRM IF EXISTING FAN IS WORKING AT 100% RATED CAPACITY. IF NOT REPLACE WITH SIMILAR KIND.
7. S.A.E.- SAME AS EXISTING & V.I.F. -VERIFY IN FIELD.

## HOOD SCHEDULE

| UNIT ID | MANUFACTURER | LENGTH | MODEL | TYPE | COOKING | EXHAUST RISERES | | | CONSTRUCTION | WEIGHT |
|---|---|---|---|---|---|---|---|---|---|---|
| | | (FEET-INCH) | | | TEMPERATURE (DEG F) | AIR (CFM) | SIZE (WXLXH) (INCH) | E.S.P (IN. W.G.) | | (LBS) |
| HOOD-1(N) | ECON-AIR | 8'-5" | 5424 EX-2-PSP-F | I | 450 | 1894 | 10"X18"X4" | 0.868 | 430 STAINLESS STEEL | 477 |
| HOOD-2(N) | ECON-AIR | 8'-0" | 5424 EX-2-PSP-F | I | 450 | 1800 | 10"X17"X4" | 0.872 | 430 STAINLESS STEEL | 846 |

**NOTES :**

1. REFER HOOD DETAILS ON SHEET H1.0 TO H1.2.

## AIR CURTAIN SCHEDULE

| MANUFACTURER | UNIT ID | MODEL | LENGTH (IN.) | CFM | VELOCITY (FPM) | HEATING MODE | V/PH/HZ | AMPS | WEIGHT (LBS) |
|---|---|---|---|---|---|---|---|---|---|
| MARS | AC-1(N) | LPV236-1UA-OB | 36 | 900 | 1800 | UNHEATED | 115/1/60 | 2.4 | 35 |

**NOTES / ACCESSORIES:**

1. PROVIDE MANUFACTURER RECOMMENDED ACCESSORIES.
2. COORDINATE WITH ELECTRICAL CONTRACTOR FOR POWER REQUIREMENT.

## MECHANICAL AIR TERMINAL DEVICES SCHEDULE

| TAG | SIZE (INCHES) | DESCRIPTION | MATERIAL | BASIS OF DESIGN | | NOTES |
|---|---|---|---|---|---|---|
| | | | | MANUFACTURER | MODEL | |
| CDS-1(E) | S.A.E. | SUPPLY AIR DIFFUSER | S.A.E. | S.A.E. | S.A.E. | 5 |
| D-1(E) | S.A.E. | ROUND DIFFUSER | S.A.E. | S.A.E. | S.A.E. | 5 |
| EG-1(E) | S.A.E. | EXHAUST AIR DIFFUSER | S.A.E. | S.A.E. | S.A.E. | 5 |
| CDR-1(E) | S.A.E. | RETURN AIR DIFFUSER | S.A.E. | S.A.E. | S.A.E. | 5 |
| CDS-1(N) | 12X12 | SUPPLY AIR DIFFUSER | ALUMINUM | TITUS | TMS-AA | 1-4 |
| CDS-2(N) | 24X24 | PERFORATED SUPPLY AIR DIFFUSER | STEEL | TITUS | PAS | 1-4 |
| D-1(N) | DIA 12 | ROUND DIFFUSER | ALUMINUM | TITUS | TMRA-AA | 1-4 |
| D-2(N) | DIA 6 | ROUND DIFFUSER | ALUMINUM | TITUS | TMRA-AA | 1-4 |
| CDR-1(N) | 24X24 | RETURN AIR LOUVERED GRILLE | ALUMINUM | TITUS | 350FL | 1-4 |

**NOTES:**

1. COORDINATE FINAL COLOR/FINISH WITH ARCHITECT/OWNER.
2. PROVIDE FRAME FOR MOUNTING AIR DEVICE IN LAY-IN GRID CEILING UNLESS REFLECTED CEILING PLAN INDICATES HARD CEILING. IN AREAS WITH HARD CEILINGS, PROVIDE FRAMES FOR SURFACE MOUNTING.
3. UNLESS OTHERWISE NOTED, BRANCH DUCTS SERVING AIR DEVICES SHALL BE SAME SIZE AS NECK OF AIR DEVICE.
4. AIR DEVICE SHALL BE OF GALVANIZED FINISH WHEN INSTALLED ON EXPOSED DUCTWORK.
5. S.A.E. -SAME AS EXISITNG.

**FOR ROUND NECK DIFFUSER NECK SIZE SHALL BE :**

16"DIA : 801 & ABOVE
14" DIA : 601-800
12" DIA : 401-650
10" DIA : 251-400
8" DIA : 101-250
6" DIA : 0-100

## VENTILATION CALCULATIONS AS PER TABLE 18-28-403.3 OF MUNICIPAL CODE OF CHICAGO

| ROOM DESCRIPTION | | ORDINANCE REQUIREMENTS | | MINIMUM REQUIRED | | | ACTUAL PROVIDED | | |
|---|---|---|---|---|---|---|---|---|---|
| | | MECHANICAL VENITLATION | | MECHANICAL VENITLATION | | | MECHANICAL VENITLATION | | |
| ROOM NAME | FLOOR AREA (SF) | SUPPLY AIR (CFM/SF) | EXHAUST AIR (CFM/SF) | SUPPLY AIR (CFM) | EXHAUST AIR FROM ROOM (CFM) | OUTSIDE AIR (CFM) | SUPPLY AIR (CFM) | EXHAUST AIR FROM ROOM (CFM) | OUTSIDE AIR (CFM) |
| VESTIBULE | 26 | 1 | 0 | 30 | 0 | 10 | 4000 | 2980 | 1020 |
| CUSTOMER AREA | 191 | 1 | 1 | 195 | 195 | 65 | | | |
| SERVICE AREA | 263 | 1 | 1 | 265 | 265 | 90 | | | |
| DINING | 509 | 1.5 | 1.5 | 765 | 765 | 255 | | | |
| BAKING AREA | 75 | 1 | 1 | 75 | 75 | 25 | | | |
| SCULLERY | 94 | 1 | 1 | 95 | 95 | 35 | | | |
| KITCHEN | 145 | 1.2 | 4 | 175 | 580 | 60 | | | |
| FEMALE TOILET | 56 | 0 | 2 | 0 | 115 | 0 | | | |
| MALE TOILET | 58 | 0 | 2 | 0 | 120 | 0 | | | |
| **TOTAL** | **1417** | **7.7** | **13.5** | **1600** | **2210** | **540** | **4000** | **2980** | **1020** |

## AIR BALANCE

| UNIT | AREA SERVED | SUPPLY AIR | OUTSIDE AIR | RETURN AIR | EXHAUST AIR |
|---|---|---|---|---|---|
| RTU-1(E) | SEE PLAN | 4000 CFM | 1020 CFM | 2980 CFM | - |
| AHU-1(N) | SEE PLAN | 883 CFM | 0 CFM | 883 CFM | - |
| MAU-1(N) | SEE PLAN | - | 2970 CFM | - | - |
| KEF-1(N) | SEE PLAN | - | - | - | 3694 CFM |
| EF-1(E) | SEE PLAN | - | - | - | 240 CFM |
| | TOTAL: | 4883 CFM | 3990 CFM | 3863 CFM | 3934 CFM |
| | BUILDING PRESSURE: | ..... | | 56 CFM | **POSITIVE** |

1. CONTRACTOR TO ADJUST MOTORIZED DAMPER ON OUTSIDE AIR TAP TO PROVIDE OUTSIDE AIR AS MENTIONED IN ABOVE TABLE.

Property of NY Engineers

**SHEET HISTORY SCHEDULE**

**ISSUE DATE:** 10/16/2024 12:02:18 PM

**RENOVATION BUILT -OUT**

**ZEITLIN'S DELICATESSEN**

**DRAWN BY:** NYE

**QAQC:** NYE

**APPROVED BY:** NYE

**PROJECT NUMBER:** 2432

**MECHANICAL SCHEDULES**

**M6.0**

FOR QUESTIONS, CALL THE
Chicago Foodservice Division
REGION 55
PHONE: (630) 377 - 2611
EMAIL: reg55@econair.com

PATENT NUMBERS
AC-PSP (UNITED STATES) - US PATENT 7963830 B2.
AC-PSP WALL (CANADA) - CA PATENT 2820509.
AC-PSP ISLAND (CANADA) - CA PATENT 2520330.

*HOOD INFORMATION – JOB#7095554*

| HOOD NO | TAG | MODEL | MANUFACTURER | LENGTH | MAX COOKING TEMP | TYPE | APPLIANCE DUTY | DESIGN CFM/FT | TOTAL EXH CFM | EXHAUST PLENUM RISER(S) WIDTH | LENG | HEIGHT | DIA | CFM | VEL | SP | TOTAL SUPPLY CFM | HOOD CONSTRUCTION | HOOD CONFIG END TO END | ROW |
|---|---|---|---|---|---|---|---|---|---|---|---|---|---|---|---|---|---|---|---|---|
| 1 | E06L | 5424 EX-2-PSP-F | ECON-AIR | 8' 5" | 450 DEG | I | MEDIUM | 225 | 1894 | 10" | 18" | 4" | | 1894 | 1515 | -0.868" | 1515 | 430 SS WHERE EXPOSED | LEFT | ALONE |
| 2 | E06R | 5424 EX-2-PSP-F | ECON-AIR | 8' 0" | 450 DEG | I | MEDIUM | 225 | 1800 | 10" | 17" | 4" | | 1800 | 1525 | -0.872" | 1455 | 430 SS WHERE EXPOSED | RIGHT | ALONE |

*HOOD INFORMATION*

| HOOD NO | TAG | FILTER(S) TYPE | QTY | HEIGHT | LENGTH | EFFICIENCY @ 7 MICRONS | LIGHT(S) QTY | TYPE | WIRE GUARD | LOCATION | UTILITY CABINET(S) SIZE | FIRE SYSTEM TYPE | SIZE | ELECTRICAL MODEL # | SWITCHES QUANTITY | FIRE SYSTEM PIPING | HOOD HANGING WEIGHT |
|---|---|---|---|---|---|---|---|---|---|---|---|---|---|---|---|---|---|
| 1 | E06L | CAPTRATE SOLO FILTER | 6 | 16" | 16" | 85% SEE FILTER SPEC | 3 | RECESSED ROUND | NO | | | | | | | YES | 477 LBS |
| 2 | E06R | CAPTRATE SOLO FILTER | 5 | 16" | 16" | 85% SEE FILTER SPEC | 3 | RECESSED ROUND | NO | RIGHT | 12"x54"x24" | TANK FS | 4.0/4.0/4.0 | | | YES | 846 LBS |

*HOOD OPTIONS*

| HOOD NO | TAG | OPTION |
|---|---|---|
| 1 | E06L | FIELD WRAPPER 18.00" HIGH FRONT. |
| | | BACKSPLASH 80.00" HIGH X 210.00" LONG 430 SS VERTICAL. |
| | | LEFT SIDESPLASH 80.00" HIGH X 54.00" LONG 430 SS VERTICAL. |
| | | LEFT END STANDOFF (FINISHED) 1" WIDE 54" LONG INSULATED. |
| | | BALANCE DAMPERS. |
| | | RISER SENSOR INSTALL 6IN PLEN. |
| 2 | E06R | FIELD WRAPPER 18.00" HIGH FRONT. |
| | | RIGHT QUARTER END PANEL 23" TOP WIDTH, 0" BOTTOM WIDTH, 23" HIGH 430 SS. |
| | | BALANCE DAMPERS. |
| | | RISER SENSOR INSTALL 6IN PLEN. |

*PERFORATED SUPPLY PLENUM(S)*

| HOOD NO | TAG | POS | LENGTH | WIDTH | HEIGHT | TYPE | RISER(S) WIDTH | LENG | DIA | CFM | SP |
|---|---|---|---|---|---|---|---|---|---|---|---|
| 1 | E06L | Front | 102" | 16" | 6" | MUA | 12" | 24" | | 757 | 0.250" |
| | | | | | | MUA | 12" | 24" | | 757 | 0.250" |
| 2 | E06R | Front | 108" | 16" | 6" | MUA | 12" | 24" | | 727 | 0.200" |
| | | | | | | MUA | 12" | 24" | | 727 | 0.200" |

*FIRE SYSTEM INFORMATION – JOB#7095554*

| FIRE SYSTEM NO | TAG | TYPE | SIZE | MAX FP | DESIGN FP | INSTALLATION SYSTEM | LOCATION ON HOOD |
|---|---|---|---|---|---|---|---|
| 1 | FS-1 | TANK FS | 4.0/4.0/4.0 | 60 | 51 | FIRE CABINET RIGHT | RIGHT, HOOD 2 |

*GAS VALVE(S)*

| FIRE SYSTEM NO | TAG | TYPE | SIZE | SUPPLIED BY |
|---|---|---|---|---|
| 1 | FS-1 | SC ELECTRICAL | 2.000 | ECON-AIR |

SPECIFICATION: CAPTRATE® GREASE-STOP® SOLO FILTER

THE CAPTRATE GREASE-STOP SOLO FILTER IS A SINGLE-STAGE FILTER FEATURING A UNIQUE S-BAFFLE DESIGN IN CONJUNCTION WITH A SLOTTED REAR BAFFLE DESIGN, TO DELIVER EXCEPTIONAL FILTRATION EFFICIENCY.

FILTER IS STAINLESS STEEL CONSTRUCTION, AND SIZED TO FIT INTO STANDARD 2-INCH DEEP HOOD CHANNEL(S).

UNITS SHALL INCLUDE STAINLESS STEEL HANDLES AND A FASTENING DEVICE TO SECURE THE TWO COMPONENTS WHEN ASSEMBLED.

GREASE EXTRACTION EFFICIENCY PERFORMANCE SHALL REMOVE AT LEAST 75% OF GREASE PARTICLES FIVE MICRONS IN SIZE, AND 85% GREASE PARTICLES SEVEN MICRONS IN SIZE AND LARGER, WITH A CORRESPONDING PRESSURE DROP NOT TO EXCEED 1.0 INCHES OF WATER GAUGE.

THE CAPTRATE GREASE-STOP SOLO WAS TESTED TO ASTM STANDARD ASTM F2519-05. MANUFACTURER APPROVED FOR USE IN SOLID FUEL APPLICATIONS AS A SPARK ARRESTER.

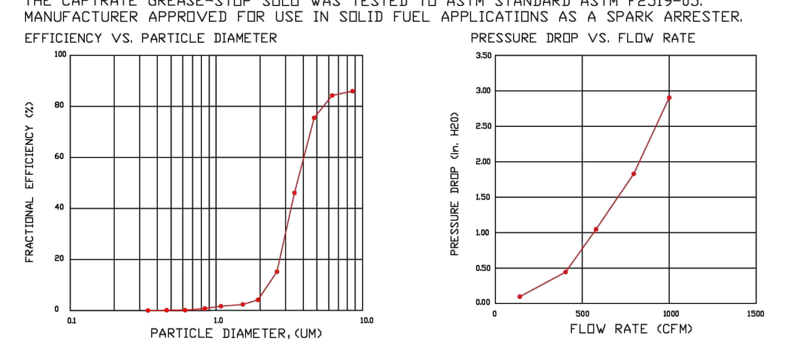


CAPTRATE FILTERS ARE BUILT IN COMPLIANCE WITH:
NFPA #96.
NSF STANDARD #2.
UL STANDARD #1046.
INT. MECH. CODE (IMC).
ULC-S649.

ECON-AIR HOODS ARE BUILT IN COMPLIANCE WITH
NFPA #96
NSF
E.T.L. LISTED 3054804-001 TO

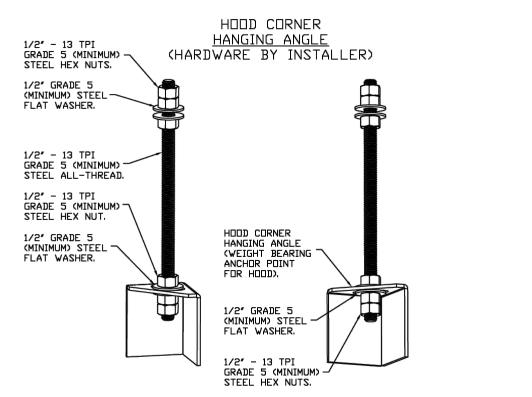


ASSEMBLY INSTRUCTIONS

HANGING ANGLE MUST BE SUPPORTED WITH 1/2" - 13 TPI GRADE 5 (MINIMUM) ALL-THREAD. SANDWICH HANGING ANGLES AND CEILING ANCHOR POINTS WITH 1/2" GRADE 5 (MINIMUM) STEEL FLAT WASHERS AND 1/2" - 13 TPI GRADE 5 (MINIMUM) HEX NUTS AS SHOWN. MUST USE DOUBLED HEX NUT CONFIGURATION BENEATH HOOD HANGING ANGLES AND ABOVE CEILING ANCHORS. MAINTAIN 1/4" OF EXPOSED THREADS BENEATH BOTTOM HEX NUT. TORQUE ALL HEX NUTS TO 57 FT-LBS.

VERIFY CEILING HEIGHT
Height required to verify that the hood will fit and to size the enclosure panels
☐ Drop Ceiling ☐ Hard Drywall Ceiling

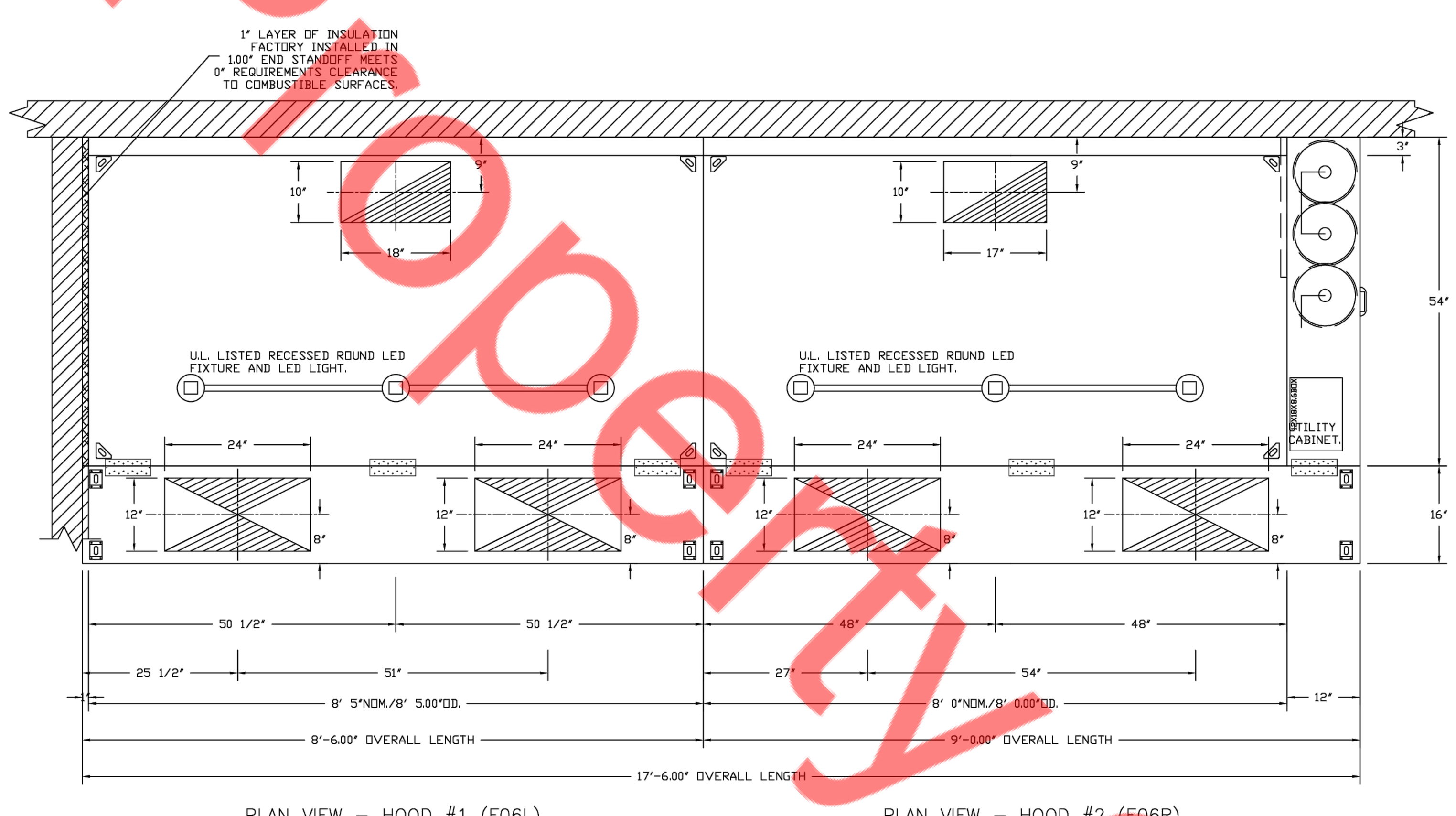


PLAN VIEW – HOOD #1 (E06L)
8' 5.00" LONG 5424EX-2-PSP-F

PLAN VIEW – HOOD #2 (E06R)
8' 0.00" LONG 5424EX-2-PSP-F

DUCT TEMPERATURE SENSOR (TYPICAL)

Provides exhaust air temperature for proper hood control operation. For all installations excluding a single hood with factory risers and a hood mounted panel, duct mounted temperature sensors will need to be field wired. 2-wire 18 AWG plenum rated thermistor cable must be used.

ROOM TEMPERATURE SENSOR

Provides room override based on temperature differential between the room and duct. Installed by electrician on a wall, 5'-6" off the finished floor, in the space but not directly under the hood or close to an appliance (including the electrical control box) or near HVAC register so that the reading is accurate for space.

HOOD CONTROL INTERFACE

The LCD interface provides user control and hood status. The faceplate is connected to the hood control panel through CAT-5 cable. A faceplate has 2 RJ-45 connectors. One connects to port J4 or J5 in the hood control panel and the other will typically be occupied by a RJ-45 end-of-line terminator.

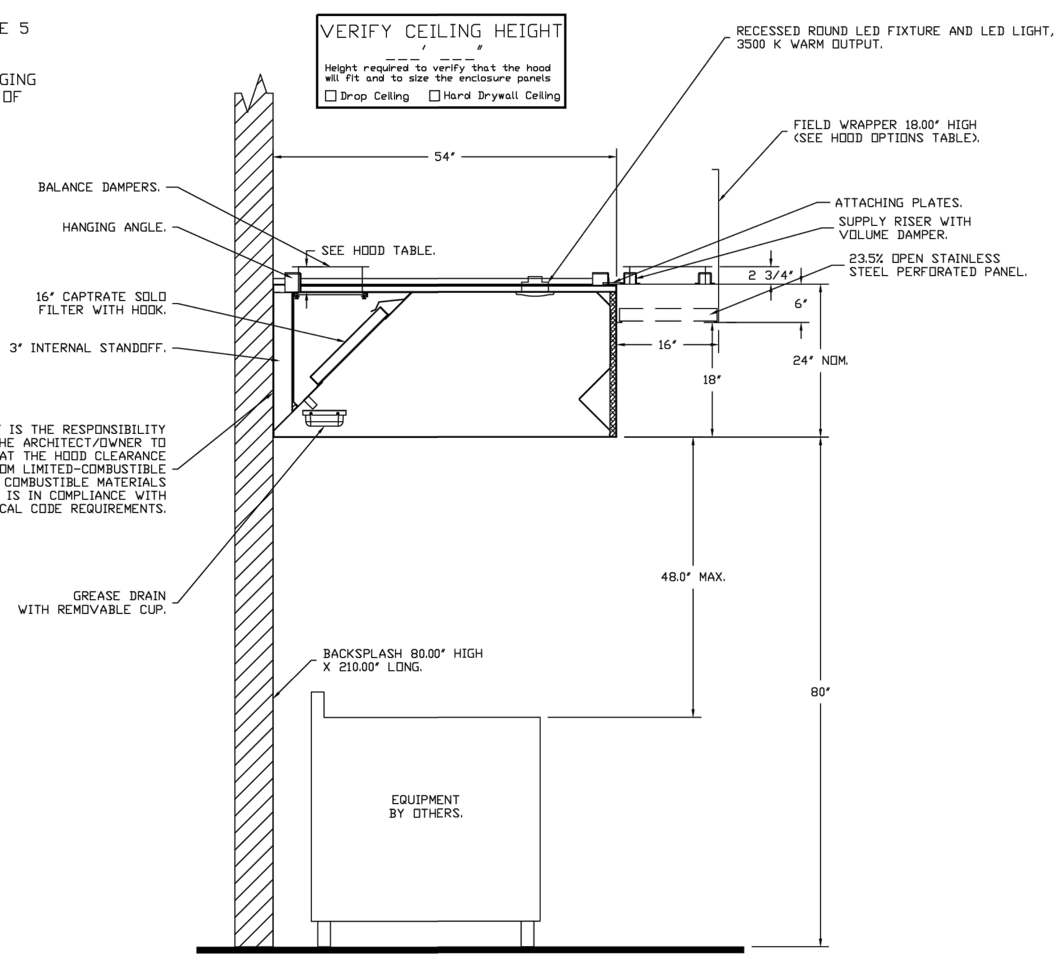


SECTION VIEW – MODEL 5424EX-2-PSP-F
HOOD – #1 (E06L)

econ·air
Chicago Foodservice Division
www.econair.com
1120 Charleston Drive, St. Charles, IL, 60174 PHONE: (630) 377 - 2611 FAX: 9195168738 EMAIL: reg55@econair.com

REVISIONS
DESCRIPTION | DATE:

Zeitlin's Deli – N Clyborn

DATE: 11/14/2024
DWG.#: 7095554
DRAWN BY: WEM
SCALE: 3/4" = 1'-0"
MASTER DRAWING
SHEET NO. 1

*EXHAUST FAN INFORMATION – JOB#7095554*

| FAN UNIT NO | TAG | QTY | FAN UNIT MODEL # | MANUFACTURER | CFM | ESP | RPM | MOTOR ENCL | HP | BHP | PHASE | VOLT | FLA | DISCHARGE VELOCITY | WEIGHT (LBS) | SONES |
|---|---|---|---|---|---|---|---|---|---|---|---|---|---|---|---|---|
| 1 | EF-1 | 1 | EADU200H | ECON-AIR | 3694 | 1.500 | 1271 | ODP,PREMIUM | 5.000 | 2.0860 | 3 | 208 | 15.0 | 899 FPM | 215 | 25.5 |

*MUA FAN INFORMATION – JOB#7095554*

| FAN UNIT NO | TAG | QTY | FAN UNIT MODEL # | BLOWER | HOUSING | MIN CFM | DESIGN CFM | ESP | RPM | MOTOR ENCL | HP | BHP | PHASE | VOLT | FLA | MCA | MOCP | WEIGHT (LBS) | SONES |
|---|---|---|---|---|---|---|---|---|---|---|---|---|---|---|---|---|---|---|---|
| 2 | MUA-1 | 1 | EA2-D.500-20D | 20MF-2-MOD | A2-D.500 | 2000 | 2970 | 0.75 | 1316 | ODP,PREMIUM | 2.000 | 0.9040 | 3 | 208 | 6.1 | 7.7A | 15A | 674 | 9.1 |

*GAS FIRED MAKE-UP AIR UNIT(S)*

| FAN UNIT NO | TAG | INPUT BTUs | OUTPUT BTUs | TEMP RISE | REQUIRED INPUT GAS PRESSURE | GAS TYPE | BURNER EFFICIENCY(%) |
|---|---|---|---|---|---|---|---|
| 2 | MUA-1 | 239642 | 220471 | 71°F | 7 IN. W.C. - 14 IN. W.C. | NATURAL | 92 |

*FAN OPTIONS*

| FAN UNIT NO | TAG | QTY | DESCRIPTION |
|---|---|---|---|
| 1 | EF-1 | 1 | GREASE BOX |
| | | 1 | FAN BASE CERAMIC SEAL - DU/DR200HFA - INSTALLED AT PLANT - FOR GREASE DUCTS |
| | | 1 | 2 YEAR PARTS WARRANTY |
| 2 | MUA-1 | 1 | SIZE 2 TEMPERED COMMERCIAL DOWN DISCHARGE FOR DIRECT DRIVE AHUS |
| | | 1 | INLET PRESSURE GAUGE, 0-35" |
| | | 1 | MANIFOLD PRESSURE GAUGE, -5 TO 15" WC |
| | | 1 | BUTTERFLY MOD VALVE OPTION FOR MOD SIZE 2 (1" MOD VALVE) |
| | | 1 | SHIP LOOSE GAS STRAINER 1" |
| | | 1 | CASLINK BUILDING MONITORING SYSTEM - INTERNET OR CELLULAR CONNECTION REQUIRED |
| | | 1 | MOTORIZED BACKDRAFT DAMPER FOR A2-D HOUSING - MEETS AMCA CLASS 1A RATING |
| | | 1 | SEPARATE 120V WIRING PACKAGE (REQUIRED AND USED ONLY FOR DCV OR PREWIRE WITH VFD) - THREE PHASE ONLY |
| | | 1 | SIZE 2 DIRECT FIRED HEATER LOW CFM PROFILE PACKAGE - USED ON HEATERS UNDER 2500 CFM |
| | | 1 | 2 YEAR PARTS WARRANTY |
| | | 1 | EXTERIOR GAS CONNECTION PROVIDED BY FACTORY WITH QUICK SEAL AND ANTI-ROTATION BRACKET |

*FAN ACCESSORIES*

| FAN UNIT NO | TAG | EXHAUST GREASE CUP | GRAVITY DAMPER | WALL MOUNT | SUPPLY SIDE DISCHARGE | GRAVITY DAMPER | MOTORIZED DAMPER | WALL MOUNT |
|---|---|---|---|---|---|---|---|---|
| 1 | EF-1 | YES | | | | | | |
| 2 | MUA-1 | | | | | | YES | |

*CURB ASSEMBLIES*

| NO | ON FAN | TAG | WEIGHT | ITEM | SIZE |
|---|---|---|---|---|---|
| 1 | # 1 | EF-1 | 48 LBS | CURB | 26.500"W X 26.500"L X 24.000"H VENTED. |
| 2 | # 2 | MUA-1 | 80 LBS | CURB | 31.000"W X 79.000"L X 20.000"H INSULATED. |

HMI SCHEDULE

| UNIT NUMBER | HMI # | HMI LOCATION | TEMP AVERAGING | MODBUS ADDRESS |
|---|---|---|---|---|
| FAN #2 | HMI #1 - UNIT | IN UNIT | NOT AVERAGED | 55 |

FAN #1 EADU200H – EXHAUST FAN (EF-1)

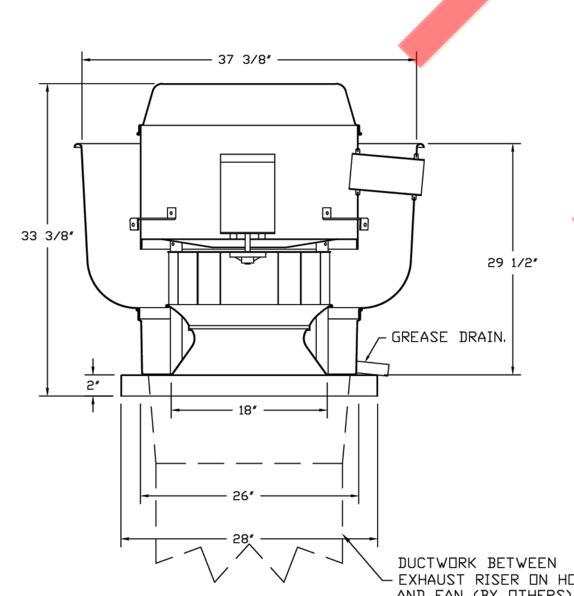


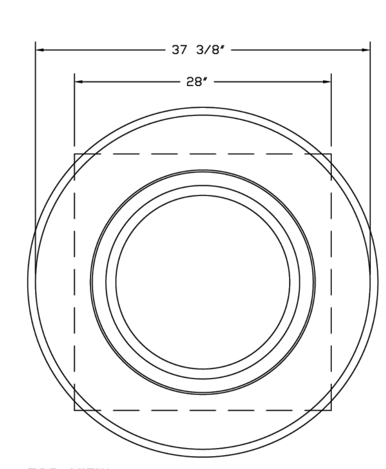


TOP VIEW

FEATURES:
- DIRECT DRIVE CONSTRUCTION (NO BELTS/PULLEYS).
- ROOF MOUNTED FANS.
- RESTAURANT MODEL.
- UL705 AND UL762 AND ULC-S645
- VARIABLE SPEED CONTROL.
- INTERNAL WIRING.
- THERMAL OVERLOAD PROTECTION (SINGLE PHASE).
- HIGH HEAT OPERATION 300°F (149°C).
- GREASE CLASSIFICATION TESTING.
- NEMA 3R SAFETY DISCONNECT SWITCH.

NORMAL TEMPERATURE TEST
EXHAUST FAN MUST OPERATE CONTINUOUSLY WHILE EXHAUSTING AIR AT 300°F (149°C) UNTIL ALL FAN PARTS HAVE REACHED THERMAL EQUILIBRIUM, AND WITHOUT ANY DETERIORATING EFFECTS TO THE FAN WHICH WOULD CAUSE UNSAFE OPERATION.

ABNORMAL FLARE-UP TEST
EXHAUST FAN MUST OPERATE CONTINUOUSLY WHILE EXHAUSTING BURNING GREASE VAPORS AT 600°F (316°C) FOR A PERIOD OF 15 MINUTES WITHOUT THE FAN BECOMING DAMAGED TO ANY EXTENT THAT COULD CAUSE AN UNSAFE CONDITION.

OPTIONS
- GREASE BOX.
- FAN BASE CERAMIC SEAL - DU/DR200HFA - INSTALLED AT PLANT - FOR GREASE DUCTS.
- 2 YEAR PARTS WARRANTY.

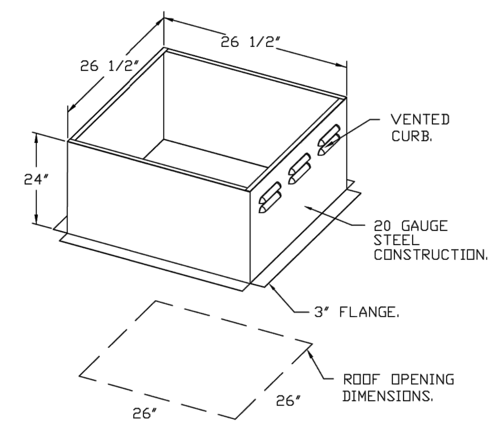


HINGE KIT INSTALLATION

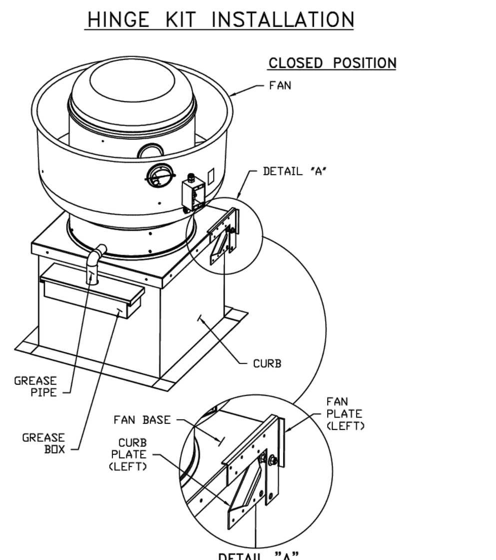


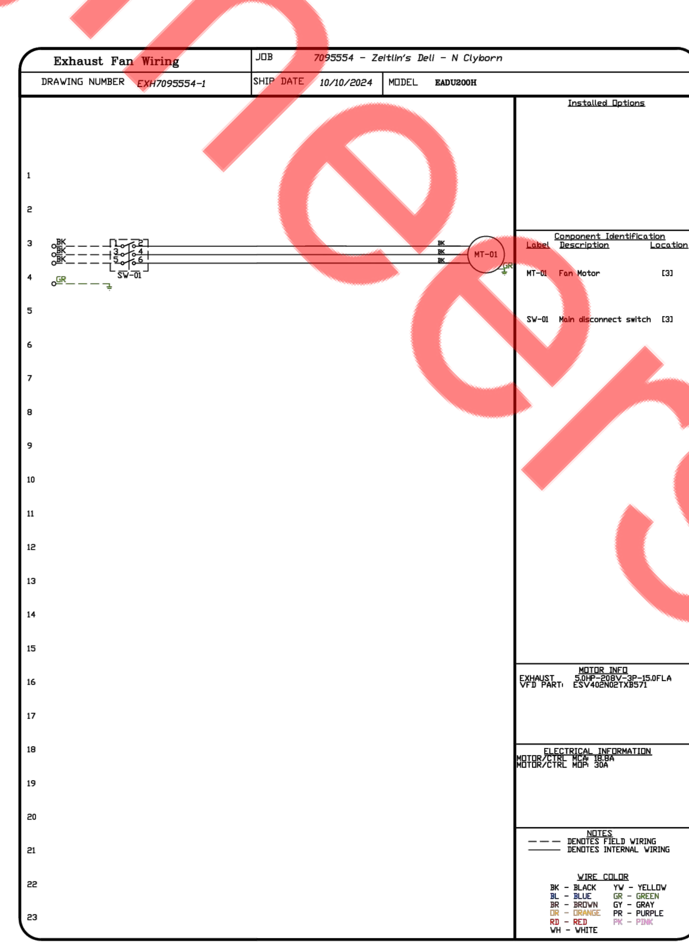


econ·air
Chicago Foodservice Division
www.econair.com
1120 Charleston Drive, St. Charles, IL, 60174 PHONE: (630) 377 - 2611 FAX: 9195168738 EMAIL: reg55@econair.com

REVISIONS
DESCRIPTION | DATE:

Zeitlin's Deli – N Clyborn

DATE: 11/14/2024
DWG.#: 7095554
DRAWN BY: WEM
SCALE: 3/4" = 1'-0"
MASTER DRAWING
SHEET NO. 2

SHEET HISTORY SCHEDULE

ISSUE DATE: 10/16/2024 12:02:18 PM

RENOVATION BUILT -OUT

ZEITLIN'S DELICATESSEN

DRAWN BY: NYE
QAQC: NYE
APPROVED BY: NYE
PROJECT NUMBER: 2432

HOOD DETAILS (1 OF 3)

H1.0

Property of NY Engineers

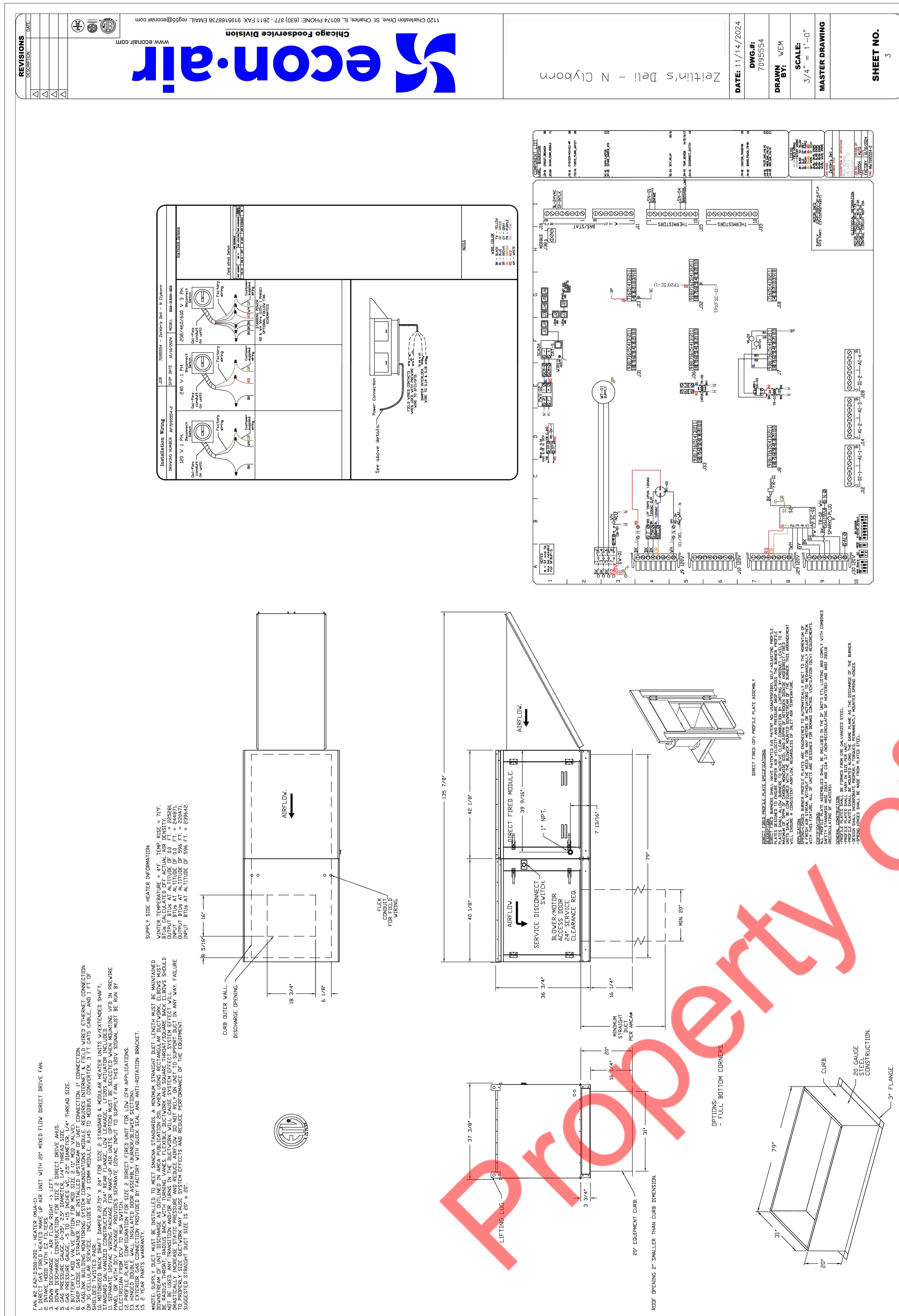


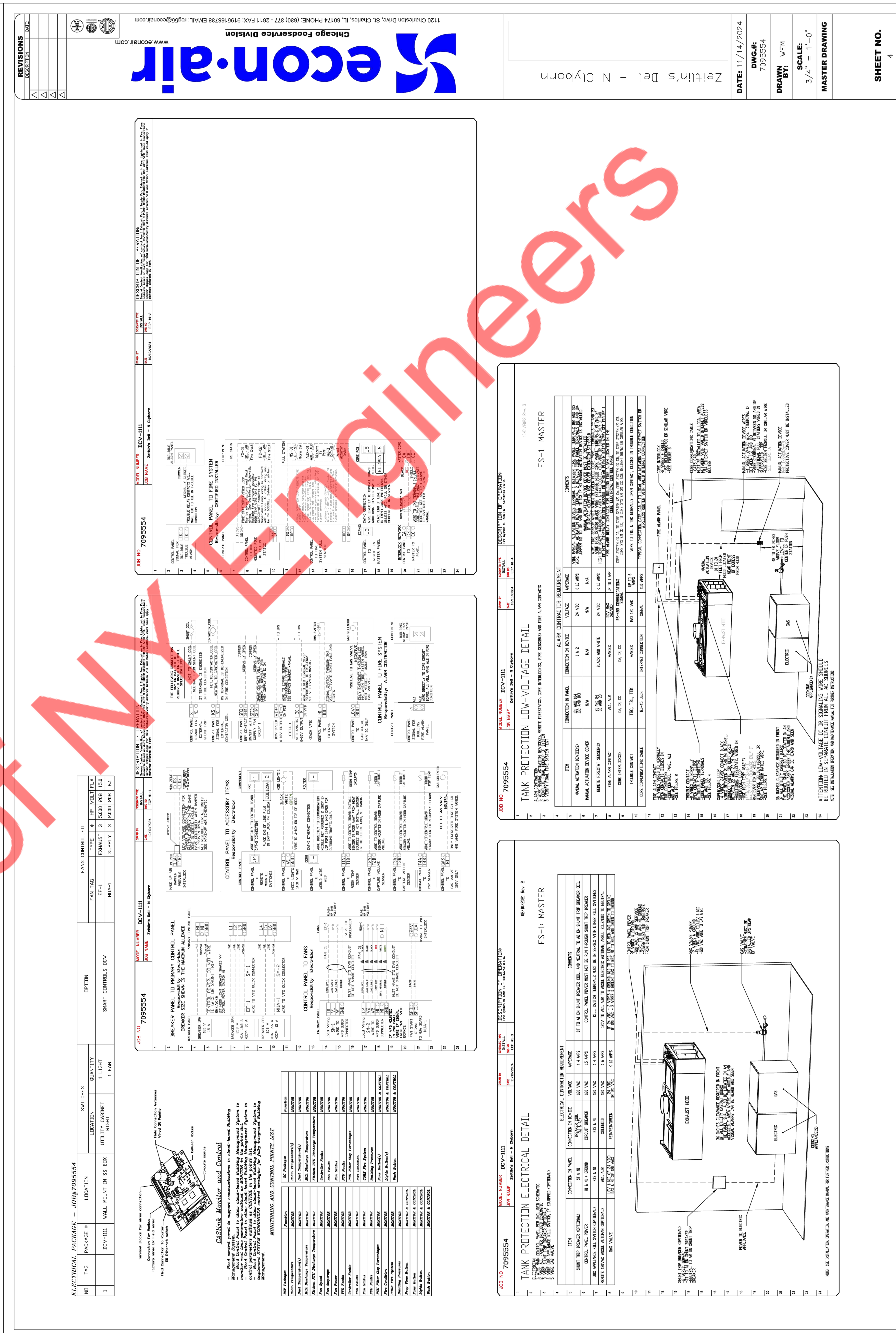


Property of NY Engineers

**SHEET HISTORY SCHEDULE**

| | | |
|---|---|---|
| | | |
| | | |
| | | |
| | | |
| | | |

ISSUE DATE: 10/16/2024 12:02:18 PM

RENOVATION BUILT -OUT

**ZEITLIN'S DELICATESSEN**

| | |
|---|---|
| DRAWN BY: | NYE |
| QAQC: | NYE |
| APPROVED BY: | NYE |
| PROJECT NUMBER: | 2432 |

HOOD DETAILS (2 OF 3)

# H1.1

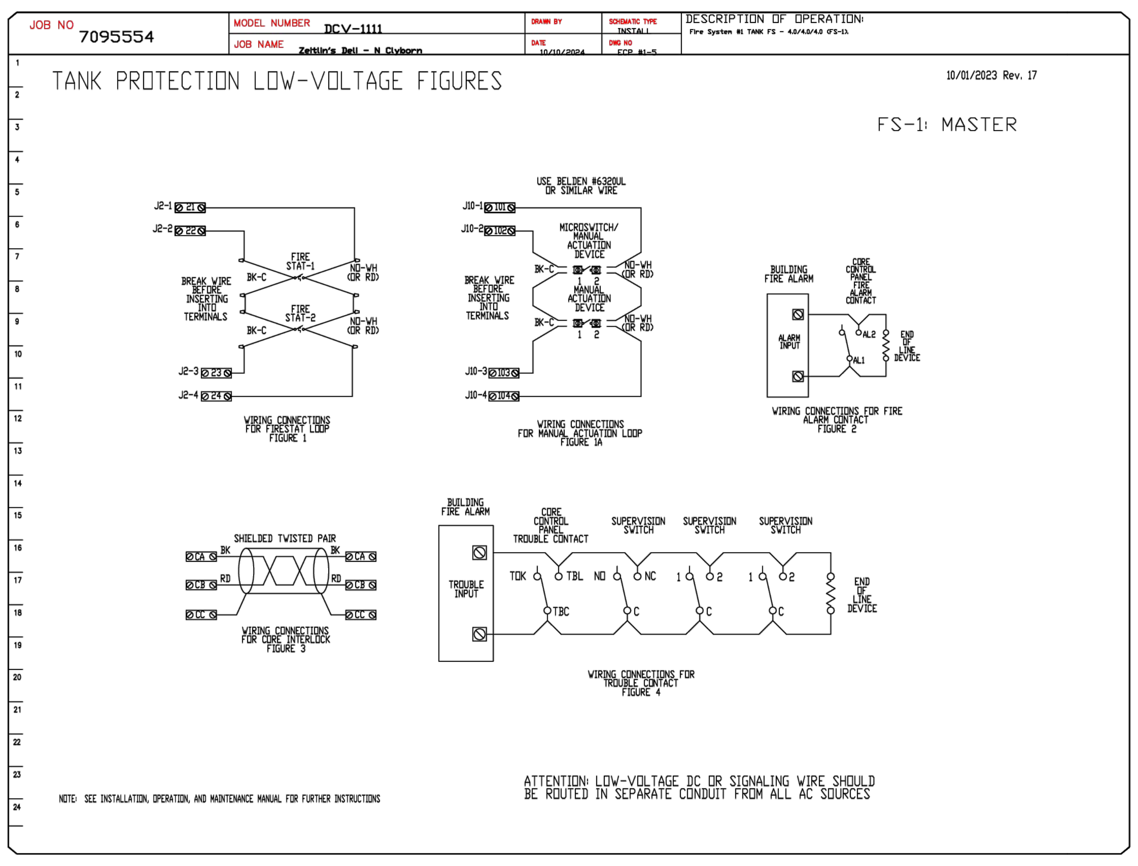


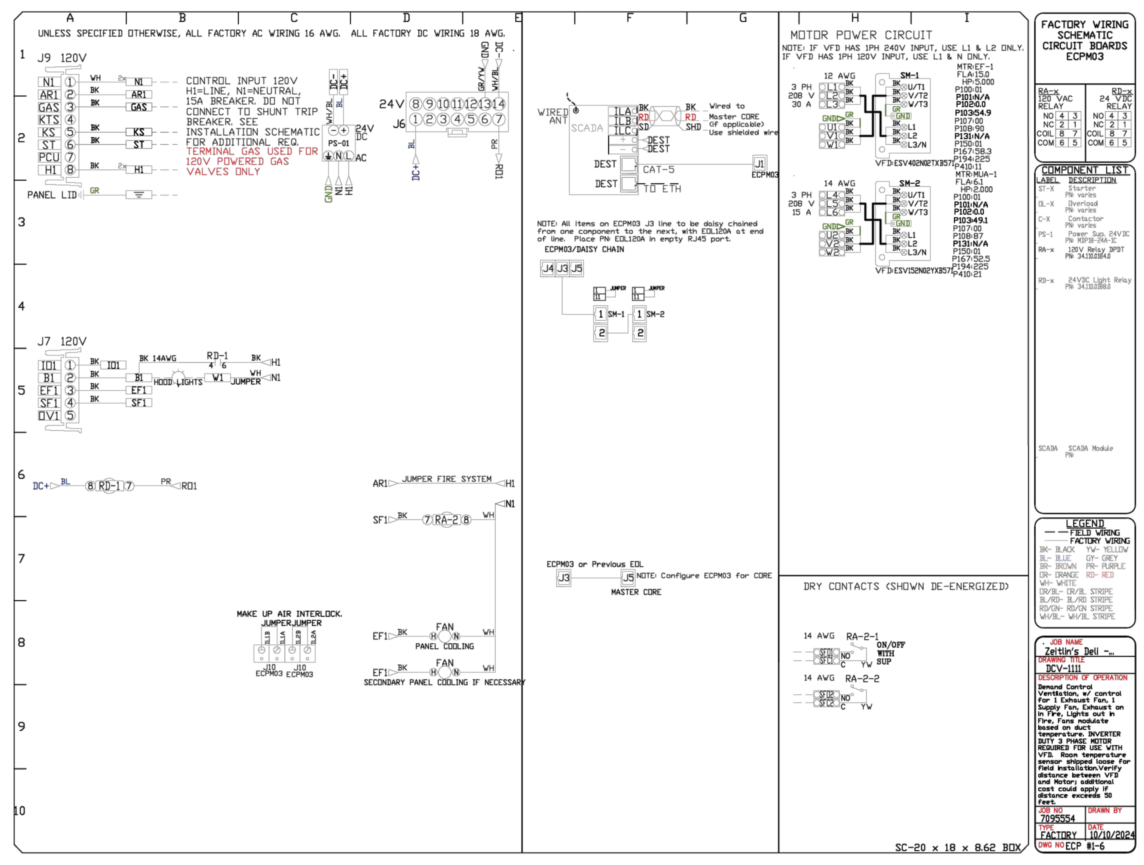


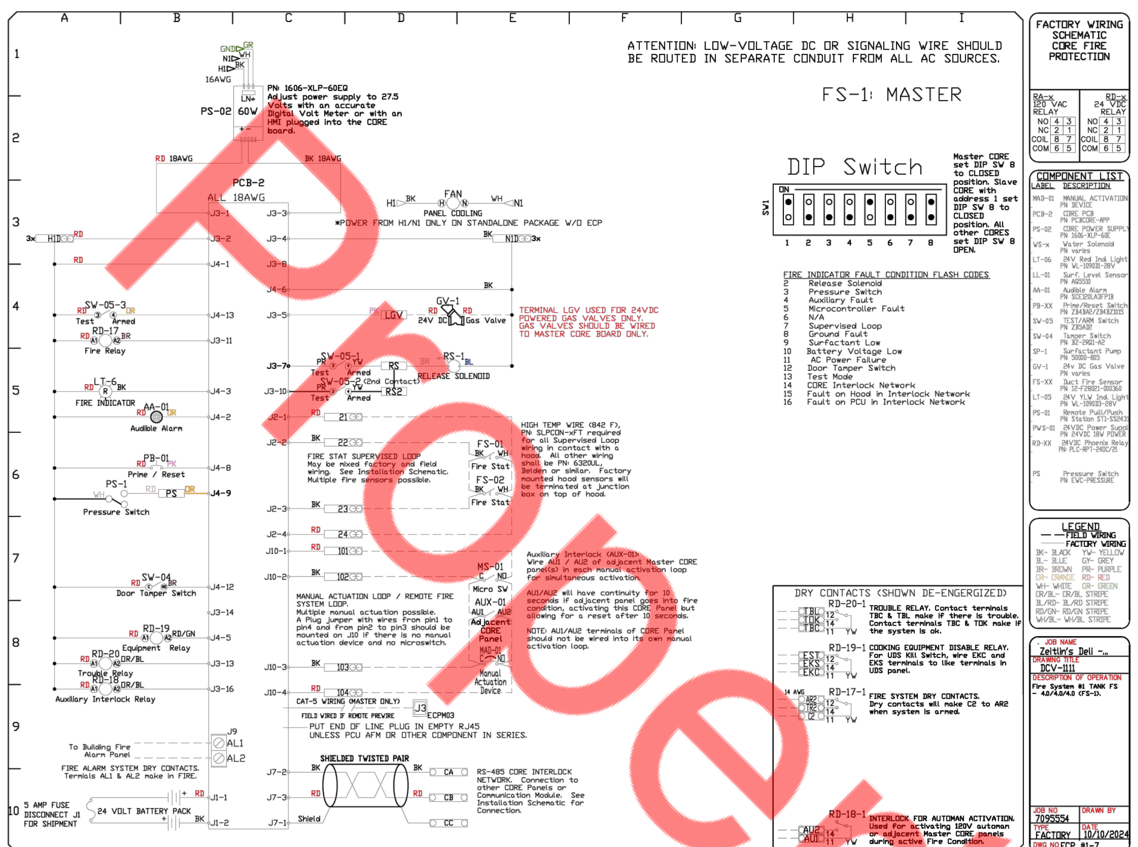


## DEMAND CONTROL VENTILATION HOOD CONTROL PANEL SPECIFICATIONS:

- CONTROLS SHALL BE LISTED BY ETL (UL 508A) AND SHALL COMPLY WITH DEMAND VENTILATION SYSTEM TURNDOWN REQUIREMENTS OUTLINED IN IECC 403.7.5 (2021).
- THE CONTROL ENCLOSURE SHALL BE NEMA 1 RATED AND LISTED FOR INSTALLATION INSIDE OF THE EXHAUST HOOD UTILITY CABINET. THE CONTROL ENCLOSURE MAY BE CONSTRUCTED OF STAINLESS STEEL OR PAINTED STEEL.
- TEMPERATURE PROBE(S) LOCATED IN THE EXHAUST DUCT RISER(S) SHALL BE CONSTRUCTED OF STAINLESS STEEL.
- A DIGITAL CONTROLLER SHALL BE PROVIDED TO ACTIVATE THE HOOD EXHAUST FANS DYNAMICALLY BASED ON A FIXED DIFFERENTIAL BETWEEN THE AMBIENT AND DUCT TEMPERATURES SENSORS. THIS FUNCTION SHALL MEET THE REQUIREMENTS OF IMC 507.1.1.
- A DIGITAL CONTROLLER SHALL PROVIDE ADJUSTABLE HYSTERESIS SETTINGS TO PREVENT CYCLING OF THE FANS AFTER THE COOKING APPLIANCES HAVE BEEN TURNED OFF AND/OR THE HEAT IN THE EXHAUST SYSTEM IS REDUCED.
- A DIGITAL CONTROLLER SHALL PROVIDE AN ADJUSTABLE MINIMUM FAN RUN-TIME SETTING TO PREVENT FAN CYCLING.
- VARIABLE FREQUENCY DRIVES (VFDS) SHALL BE PROVIDED FOR FANS AS REQUIRED. THE DIGITAL CONTROLLER SHALL MODULATE THE VFDS BETWEEN A MINIMUM SETPOINT AND A MAXIMUM SETPOINT ON DEMAND. THE DUCT TEMPERATURE SENSOR INPUT(S) TO THE DIGITAL CONTROLLER SHALL BE USED TO CALCULATE THE SPEED REFERENCE SIGNAL.
- THE VFD SPEED RANGE OF OPERATION SHALL BE FROM 0% TO 100% FOR THE SYSTEM, WITH THE ACTUAL MINIMUM SPEED SET AS REQUIRED TO MEET MINIMUM VENTILATION REQUIREMENTS.
- AN INTERNAL ALGORITHM TO THE DIGITAL CONTROLLER SHALL MODULATE SUPPLY FAN VFD SPEED PROPORTIONAL TO ALL EXHAUST FANS THAT ARE LOCATED IN THE SAME FAN GROUP AS THE SUPPLY FAN.
- THE SYSTEM SHALL OPERATE IN PREP MODE DURING LIGHT COOKING LOAD OR COOL DOWN MODE WHEN SUFFICIENT HEAT REMAINS UNDERNEATH THE HOOD SYSTEM AFTER COOKING OPERATIONS HAVE COMPLETED. OPERATION DURING EITHER OF THESE PERIODS WILL DISABLE THE SUPPLY FANS AND PROVIDE AN EXHAUST FAN SPEED THAT IS EQUAL TO THE MINIMUM VENTILATION REQUIREMENT.
- A DIGITAL CONTROLLER SHALL DISABLE THE SUPPLY FAN(S), ACTIVATE THE EXHAUST FAN(S), ACTIVATE THE APPLIANCE SHUNT TRIP, AND DISABLE AN ELECTRIC GAS VALVE AUTOMATICALLY WHEN FIRE CONDITION IS DETECTED ON A COVERED HOOD.
- A DIGITAL CONTROLLER SHALL ALLOW FOR EXTERNAL BMS FAN CONTROL VIA DRY CONTACT (EXTERNAL CONTROL SHALL NOT OVERRIDE FAN OPERATION LOGIC AS REQUIRED BY CODE).
- AN LCD INTERFACE SHALL BE PROVIDED WITH THE FOLLOWING FEATURES:
  A. ON/OFF PUSH BUTTON FAN & LIGHT SWITCH ACTIVATION.
  B. INTEGRATED GAS VALVE RESET FOR ELECTRONIC GAS VALVES (NO RESET RELAY REQUIRED).
  C. VFD FAULT DISPLAY WITH AUDIBLE & VISUAL ALARM NOTIFICATION.
  D. DUCT TEMPERATURE SENSOR FAILURE DETECTION WITH AUDIBLE & VISUAL ALARM NOTIFICATION.
  E. MIS-WIRED DUCT TEMPERATURE SENSOR DETECTION WITH AUDIBLE & VISUAL ALARM NOTIFICATION.
  F. A SINGLE LOW VOLTAGE CAT-5 RJ45 WIRING CONNECTION.
  G. AN ENERGY SAVINGS INDICATOR THAT UTILIZES MEASURED KWH FROM THE VFDS.

## SYSTEM DESIGN VERIFICATION (SDV)

IF ORDERED, CAS SERVICE WILL PERFORM A SYSTEM DESIGN VERIFICATION (SDV) ONCE ALL EQUIPMENT HAS HAD A COMPLETE START UP PER THE OPERATION AND INSTALLATION MANUAL. TYPICALLY, THE SDV WILL BE PERFORMED AFTER ALL INSPECTIONS ARE COMPLETE.

ANY FIELD RELATED DISCREPANCIES THAT ARE DISCOVERED DURING THE SDV WILL BE BROUGHT TO THE ATTENTION OF THE GENERAL CONTRACTOR AND CORRESPONDING TRADES ON SITE. THESE ISSUES WILL BE DOCUMENTED AND FORWARDED TO THE APPROPRIATE SALES OFFICE. IF CAS SERVICE HAS TO RESOLVE A DISCREPANCY THAT IS A FIELD ISSUE, THE GENERAL CONTRACTOR WILL BE NOTIFIED AND BILLED FOR THE WORK. SHOULD A RETURN TRIP BE REQUIRED DUE TO ANY FIELD RELATED DISCREPANCY THAT CANNOT BE RESOLVED DURING THE SDV, THERE WILL BE ADDITIONAL TRIP CHARGES.

DURING THE SDV, CAS SERVICE WILL ADDRESS ANY DISCREPANCY THAT IS THE FAULT OF THE MANUFACTURER. SHOULD A RETURN TRIP BE REQUIRED, THE GENERAL CONTRACTOR AND APPROPRIATE SALES OFFICE WILL BE NOTIFIED. THERE WILL BE NO ADDITIONAL CHARGES FOR MANUFACTURER DISCREPANCIES.

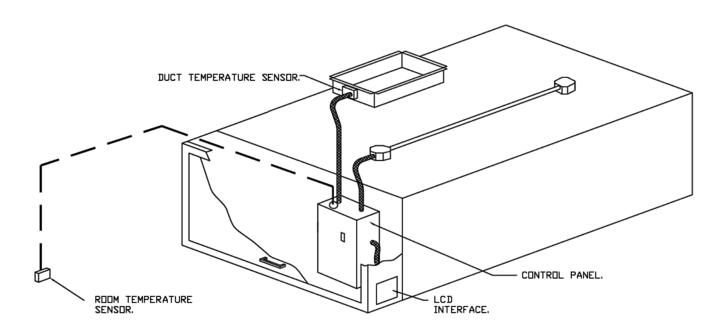


*TYPICAL HOOD CONTROL PANEL INSTALLATION*

## SEQUENCE OF OPERATIONS:

THE HOOD CONTROL PANEL IS CAPABLE OF OPERATING IN ONE OR MORE OF THE FOLLOWING STATES AT ANY GIVEN TIME:

- AUTOMATIC: THE SYSTEM OPERATES BASED ON THE DIFFERENTIAL BETWEEN ROOM TEMPERATURE AND THE TEMPERATURE AT THE HOOD CAVITY OR EXHAUST DUCT COLLAR. FANS ACTIVATE AT A CONFIGURABLE TEMPERATURE DIFFERENTIAL THRESHOLD. DEPENDING ON THE JOB CONFIGURATION EACH FAN ZONE CAN BE CONFIGURED AS STATIC OR DYNAMIC. THESE TERMS REFER TO WHETHER A VARIABLE MOTOR (SUCH AS EC MOTORS OR VFD DRIVEN MOTORS) MODULATE WITH TEMPERATURE. IF THE PANEL IS EQUIPPED WITH VARIABLE SPEED FANS AND THE ZONE IS DEFINED AS "DYNAMIC", THESE WILL MODULATE WITHIN A USER-DEFINED RANGE BASED ON THE TEMPERATURE DIFFERENTIAL. PANELS EQUIPPED WITH VARIABLE SPEED FANS AND A FAN ZONE DEFINED AS "STATIC", FANS WILL RUN AT A SET SPEED CALCULATED FOR THE DRIVE. DEMAND CONTROL VENTILATION SYSTEMS ARE CAPABLE OF MODULATING EXHAUST AND MAKE UP AIR FAN SPEEDS PER THE REQUIREMENTS OUTLINED IN IECC 403.7.5 (2021).
- MANUAL: THE SYSTEM OPERATES BASED ON HUMAN INPUT FROM AN HMI.
- SCHEDULE: A WEEKLY SCHEDULE CAN BE SET TO RUN FANS FOR A SPECIFIED PERIOD THROUGHOUT THE DAY. THERE ARE THREE OCCUPIED TIMES PER DAY TO ALLOW FOR THE USER TO SET UP A TIME THAT IS SUITABLE TO THEIR NEEDS. ANY TIME THAT IS WITHIN THE DEFINED OCCUPIED TIME, THE SYSTEM WILL RUN AT MODULATION MODE AND FOLLOW THE FAN PROCEDURE ALGORITHM BASED ON TEMPERATURE DURING THIS TIME. DURING UNOCCUPIED TIME, THE SYSTEM WILL HAVE AN EXTRA OFFSET TO PREVENT UNINTENDED ACTIVATION OF THE SYSTEM DURING A TIME WHERE THE SYSTEM IS NOT BEING OCCUPIED.
- OTHER: THE SYSTEM OPERATES BASED ON THE INPUT FROM AN EXTERNAL SOURCE (DDC, BMS OR HARD-WIRED INTERLOCK).
- FIRE: UPON ACTIVATION OF THE HOOD FIRE SUPPRESSION SYSTEM, THE EXHAUST FAN WILL COME ON OR CONTINUE TO TO RUN, THE HOOD MAKEUP AIR WILL SHUTDOWN, AND A SIGNAL WILL BE SENT FOR ACTIVATING THE SHUNT TRIP BREAKER PROVIDED BY THE ELECTRICIAN. FUEL GAS WILL SHUT OFF VIA A MECHANICAL/ELECTRICAL GAS VALVE ACTUATED BY THE HOOD FIRE SUPPRESSION SYSTEM.

REVISIONS

econ·air
Chicago Foodservice Division
1120 Charleston Drive, St. Charles, IL 60174 PHONE: (630) 377 - 2611 FAX: 9195166738 EMAIL: reg50@econair.com
www.econair.com

Zeitlin's Deli – N Clyborn

DATE: 11/14/2024
DWG.#: 7095554
DRAWN BY: WEM
SCALE: 3/4" = 1'-0"
MASTER DRAWING
SHEET NO. 5

Property of NY Engineers

SHEET HISTORY SCHEDULE

ISSUE DATE: 10/16/2024 12:02:18 PM

RENOVATION BUILT -OUT

ZEITLIN'S DELICATESSEN

DRAWN BY: NYE
QAQC: NYE
APPROVED BY: NYE
PROJECT NUMBER: 2432

HOOD DETAILS (3 OF 3)

H1.2

# ELECTRICAL SYMBOLS LIST

## SWITCHES AND CONTROLS

| | |
|---|---|
| $a | 20A SPST TOGGLE SWITCH U.O.N. "a" DENOTES LIGHTING FIXTURE CONTROLLED. |
| $a3 | 20A 3-WAY TOGGLE SWITCH U.N.O. "a" DENOTES LIGHTING FIXTURE CONTROLLED |
| $a4 | 20A 4-WAY TOGGLE SWITCH U.N.O. "a" DENOTES LIGHTING FIXTURE CONTROLLED |
| $Da | WALL BOX INCANDESCENT DIMMER SWITCH, LUTHRON MAESTRO SERIES. "a" DENOTES LIGHTING FIXTURE CONTROLLED. |
| OS | WALL OCCUPANCY SENSOR, NUMBER INDICATES TYPE; SEE OCCUPANCY SENSOR SCHEDULE. |
| $Ovs | WALL MOUNTED VACANCY SENSOR SWITCH, WATTSTOPPER CS-50PIR SERIES. |
| $0 | WALL MOUNTED SPRING WOUND TIME SWITCH TORK |
| $D | DIMMER SWITCH |
| $OS | OCCUPANCY SENSOR SWITCH |
| $DOS | COMBINATION OF DIMMER AND OCCUPANCY SENSOR SWITCH |
| | ASCO CONTACTOR C-25 TORK TIMER T-25 STACKED. |
| D | DOOR SWITCH |
| PC | PHOTOCELL IN NAMA 3R ENCLOSURE. |
| PC | WALL MOUNTED PHOTOCELL MOUNTED IN NEMA 3R ENCLOSURE. |
| BP | BELL PUSH |
| OS A | CEILING OCCUPANCY SENSOR, NUMBER INDICATES TYPE; SEE OCCUPANCY SENSOR SCHEDULE. 'A' LETTER REFERES TO WIRING DIAGRAM. |
| OS | WALL OCCUPANCY SENSOR, NUMBER INDICATES TYPE; SEE OCCUPANCY SENSOR SCHEDULE. |
| VS | WALL VACANCY SENSOR, NUMBER INDICATES TYPE; SEE OCCUPANCY SENSOR SCHEDULE. |
| VS | CEILING VACANCY SENSOR, NUMBER INDICATES TYPE; SEE OCCUPANCY SENSOR SCHEDULE. |
| DS | CEILING MOUNTED DAYLIGHT SENSOR. |

## WIRING SYSTEMS

| | |
|---|---|
| 3 UP- | POWER OR LIGHTING CIRCUITRY HOMERUN WITH PANELBOARD DESIGNATION, NUMBER WHERE USED INDICATES CIRCUIT NUMBER. IT SHALL CONSISTS OF 1#12 ø, 1#12 N. & 1#12 G. IN 3/4"C, UNLESS OTHERWISE NOTED. |
| 3 5 UP- | POWER OR LIGHTING CIRCUITRY HOMERUN WITH PANELBOARD DESIGNATION, NUMBER WHERE USED INDICATES CIRCUIT NUMBER. IT SHALL CONSISTS OF 2#12 ø, 2#12 N. & 2#12 G. IN 3/4"C, UNLESS OTHERWISE NOTED. |
| 3 5 7 UP- | POWER OR LIGHTING CIRCUITRY HOMERUN WITH PANELBOARD DESIGNATION, NUMBER WHERE USED INDICATES CIRCUIT NUMBER. IT SHALL CONSISTS OF 3#12 ø, 3#12 N. & 3#12 G. IN 3/4"C, UNLESS OTHERWISE NOTED. |
| | CONDUIT TURNING UP, SEE FLOOR PLANS FOR CONDITIONS. |
| | CONDUIT TUIRNING DOWN, SEE FLOOR PLANS FOR CONDITION. |
| | CONDUIT AND WIRE TO BUILDING GROUND. |
| | CABLE TRAY, WIDTH AND MOUNTING AS NOTED. |
| | UNDERGROUND |
| | EXISTING |
| | NEW |

## ELECTRICAL DRAWING LIST

| | |
|---|---|
| E0.1 | ELECTRICAL SYMBOL LIST, ABBREVIATIONS & GENERAL NOTES |
| E0.2 | ELECTRICAL SPECIFICATIONS SHEET 1 OF 2 |
| E0.3 | ELECTRICAL SPECIFICATIONS SHEET 2 OF 2 |
| E1.0 | ELECTRICAL LIGHTING PLAN |
| E2.0 | ELECTRICAL POWER PLAN & ROOF POWER PLAN |
| E3.0 | ELECTRICAL DETAILS |
| E4.0 | ELECTRICAL PANEL SCHEDULE AND RISER DIAGRAM |

## POWER AND TELECOMMUNICATION

| | |
|---|---|
| J | JUNCTION BOX WITH BLANK COVER PLATE, FLUSH IN FLOOR. |
| J | JUNCTION BOX WITH BLANK COVER PLATE, WALL MOUNTE, +18" AFF OR AS NOTED. |
| J | JUNCTION BOX WITH BLANK COVER PLATE, CEILING MOUNTED.. |
| | DUPLEX CONVENIENCE RECEPTACLE, +18" AFF OR AS NOTED. |
| | DUPLEX DEDICATED RECEPTACLE, +18" AFF OR AS NOTED. |
| CL | DUPLEX CONVENIENCE RECEPTACLE – 20A-1P, 125V, NEMA 5-20R MOUNTED FLUSH IN CELING. |
| GFI | DUPLEX CONVENIENCE RECEPTACLE, +18" AFF OR AS NOTED. |
| GFI | DUPLEX DEDICATED GFI RECEPTACLE, +18" AFF OR AS NOTED. |
| | SPECIAL RECEPTACLE |
| NID | NETWORK INTERFACE DEVICE. NID IS 'ONT' BOX WHICH INCLUDES BOTH 'ONT' AND ITS SISTER BOX AS PER VERIZON STANDARDS. |
| | QUAD RECEPTACLE |
| | TELEPHONE/DATA OUTLET, 4"SQUARE OUTLET BOX WITH SINGLE GANG COLLAR AND BLANK PLATE. PROVIDE 3/4" E.C., U.O.N., UP TO HUNG CEILING AND TERMINATE WITH 90° ELBOW, BUSHING AND DRAG WIRE. |
| | TELEPHONE OUTLET, WALL-MOUNTED +48" AFF UNO TEL / DATA OUTLET TO BE PROVIDED WITH 1" CONDUIT U.O.N. TO H.C. AND TERMINATED WITH 90 DEGREE REE ELBOW AND BUSHING. TEL / DATA OUTLET PLATE SHALL BE PROVIDED WITH 1 1/4"DIAMETER GROMMETED OPENING. |
| | DATA OUTLET – (1) PORT UNO, +18" AFF, UNO TEL / DATA OUTLET TO BE PROVIDED WITH 1" CONDUIT U.O.N. TO H.C. AND TERMINATED WITH 90 DEGREE ELBOW AND BUSHING. TEL / DATA OUTLET PLATE SHALL BE PROVIDED WITH 1 1/4" DIAMETER GROMMETED OPENING. |
| TV | CABLE TV OUTLET, WALL-MOUNTED AT 18" AFF UNO. |

## MOTORS AND CONTROLS

| | |
|---|---|
| M | AC INDOOR UNIT MOTOR AS NOTED WITH LIQUID TIGHT FLEXIBLE CONNECTION WITH JUNCTION BOX AND MOTOR SWITCH. |
| M WP | AC OUTDOOR UNIT MOTOR AS NOTED WITH CONTROLLER AND DISCONNECT SWITCH WITH WEATHER PROOF. |
| NF | NON FUSED DISCONNECT SWITCH AMPERAGE, AND NUMBER OF POLES AS NOTED. |
| A | 30A NON FUSED DISCONNECT SWITCH |
| B | 60A NON FUSED DISCONNECT SWITCH |
| C | 100A NON FUSED DISCONNECT SWITCH |
| D | 200A NON FUSED DISCONNECT SWITCH |
| | COMBINATION MAGNETIC STARTER AND DISCONNECT SWITCH, FURNISHED BY HVAC/CONTRACTOR, INSTALLED AND WIRED BY ELECTRICAL CONTRACTOR. |
| L 400 350 | FUSED DISCONNECT SWITCH AND FUSE AMPERAGE AS INDICATED. TOP NUMBER DENOTS SWITCH SIZE AND BOTTOM NUMBER DENOTES FUSE. |
| L | COMBINATION SOLID-STATE MOTOR STARTER. |
| MD | MOTORIZED DAMPER. |
| FSD | FIRE SMOKE DAMPER |
| M M | DUPLEX PUMP. NUMBER INDICATES HP RATING OF PUMP. |
| $S_T$ | THERMAL OVERLOAD SWITCH AT MOTOR. PROVIDE THERMAL ELEMENTS AS PER MOTOR RATING. |
| $S_M$ | MANUAL MOTOR SWITCH |
| 1.5 kW | ELECTRICAL HEATER, NUMBER DENOTES HEATER RATING |

## APPLICABLE CODES

2022 CHICAGO ENERGY CODE

2017 CHICAGO ELECTRICAL CODE

## ELECTRICAL ABBREVIATIONS

| | | | |
|---|---|---|---|
| A | AMPERES | EA | EACH |
| A/C, AC | AIR CONDITIONING UNIT | EC | EMPTY CONDUIT/ ELECTRICAL CONTRACTOR |
| AF | AMPERE FRAME/AMP FUSE | EF | EXHAUST FAN |
| AFF | ABOVE FINISHED FLOOR | EM | EMERGENCY |
| AS | AMP SWITCH | EMT | ELECTRICAL METALLIC TUBING |
| AIC | AMPS INTERRUPTING CAPACITY | EQUIP | EQUIPMENT |
| AT | AMP TRIP | ER | EXISTING TO BE RELOCATED |
| ATS | AUTOMATIC TRANSFER SWITCH | ETR | EXISTING TO REMAIN |
| AUTO | AUTOMATIC | EWF | ELECTRIFIED WORKSTATION FURNITURE |
| AWG | AMERICAN WIRE GAUGE | EWH | ELECTRIC WATER HEATER |
| C | CONDUIT | FA | FIRE ALARM |
| C/B,CB | CIRCUIT BREAKER | FBO | FURNISHED BY OTHERS, INSTALLED & WIRED BY EC |
| CKT | CIRCUIT | FDR | FEEDER |
| CLG | CEILING | FIBO | FURNISHED & INSTALLED BY OTHERS, WIRED BY EC |
| COMM | COMMUNICATION | FIXT | FIXTURE |
| CT | CURRENT TRANSFORMER | FL | FLOOR |
| CU | COPPER | FLUOR | FLUORESCENT |
| °C | DEGREE CELSIUS | G | GROUND |
| °F | DEGREE FAHRENHEIT | GFI | GROUND FAULT INTERRUPTER |
| DIA | DIAMETER | GP | GENERAL PURPOSE |
| DISC | DISCONNECT | HC | HUNG CEILING |
| DN | DOWN | HP | HORSEPOWER |
| DP | DISTRIBUTION PANEL | HWH | HOW WATER HEATER |
| DWH | DOMESTIC WATER HEATER | HZ | HERTZ |
| DWG | DRAWING | IC | INTERRUPTING CAPACITY |
| JB | JUNCTION BOX | PP | POWER PANEL |
| KCMIL | ONE THOUSAND CIRCULAR MILS | PVC | POLYVINYL CHLORIDE |
| KV | KILOVOLT | PWR | POWER |
| KVA | KILOVOLT-AMPERES | R | REMOVE |
| KW | KILOWATTS | RE | RELOCATED EXISTING |
| LP | LIGHTING PANEL | REC | RECEPTACLE |
| LTG | LIGHTING | RGS | RIGID GALVANIZED STEEL |
| MAX | MAXIMUM | RR | REMOVE & RELOCATE |
| MC | MOTOR CONTROLLER | SECT | SECTION |
| MCB | MAIN CIRCUIT BREAKER | SPDT | SINGLE POLE DOUBLE THROW |
| MER | MECHANICAL EQUIPMENT ROOM | SPST | SINGLE POLE SINGLE THROW |
| MIN | MINIMUM | SPEC | SPECIFICATION |
| MLO | MAIN LUGS ONLY | SW | SWITCH |
| MTD | MOUNTED | SWBD | SWITCHBOARD |
| MTS | MANUAL TRANSFER SWITCH | SYM | SYMMETRICAL |
| N | NEUTRAL | SYS | SYSTEMS |
| NE | NEW DEVICE TO REPLACE EXISTING | TELE | TELEPHONE |
| NIC | NOT IN CONTRACT | TEMP | TEMPERATURE |
| NL | NIGHT LIGHT | TXF | TOILET EXHAUST FAN |
| NTS | NOT TO SCALE | TYP | TYPICAL |
| OC | ON CENTER | UON | UNLESS OTHERWISE NOTED |
| P | POLES | V | VOLT/VOLTAGE |
| PB | PULLBOX | VA | VOLT AMPERE |
| PC | PERSONAL COMPUTER | VAV | VARIABLE AIR VOLUME |
| ø | PHASE | VFD | VARIABLE FREQUENCY DRIVE |
| PNL | PANEL | VP | VAPORPROOF |
| W | WATT | WP | WEATHER PROOF |
| W | WIRE | XFMR | TRANSFORMER |
| WH | WALL HEATER | ZRT | ZONE REGISTER TERMINALS |
| E | EXISTING | IG | ISOLATED GROUND |

## GENERAL NOTES

( APPLY TO ALL "E" DRAWINGS)

1. ALL WORK SHALL BE PERFORMED IN STRICT ACCORDANCE WITH THE CURRENT VERSION OF THE NATIONAL ELECTRIC CODE(NEC) WITH AMENDMENTS, LOCAL JURISDICTION REQUIREMENTS, AND ALL GOVERNING LOCAL CODES, LAWS, AND REGULATIONS.
2. CONTRACTOR SHALL VISIT THE SITE AND BECOME FAMILIAR WITH ALL EXISTING CONDITIONS THAT MAY AFFECT THE WORK. NO ADDITIONAL COMPENSATION WILL BE CONSIDERED FOR FAILURE TO DO SO.
3. CONTRACTOR SHALL OBTAIN AND PAY FOR ALL PERMITS, TEST REPORTS, AND CERTIFICATIONS FOR TEMPORARY AND FINAL CERTIFICATE OF OCCUPANCY.
4. FIRE STOP ALL PENETRATIONS OF FIRE RATED CONSTRUCTION IN A CODE APPROVED MANNER IN ORDER TO MAINTAIN FIRE RATING. ALL PENETRATIONS SHALL BE SLEEVED AND SEALED WATERTIGHT.
5. SECURE ALL SUPPORTS TO BUILDING STRUCTURE UTILIZING TOGGLE BOLTS (HOLLOW MASONRY), EXPANSION SHIELDS OR INSERTS (CONCRETE AND BRICK), MACHINE SCREWS (METAL), BEAM CLAMPS (FRAMEWORK), WOOD SCREWS (WOOD) OR PAN THRU STRAPS (METAL DECK). NAILS, RAWL PLUGS AND WOOD PLUGS ARE NOT PERMITTED. WHERE REQUIRED BY STRUCTURE, PROVIDE THRU BOLTS AND FISH PLATES. SUPPORT HORIZONTAL RUNS OF METALLIC RACEWAYS NOT MORE THAN 10 FT APART. SUPPORT RACEWAY RISERS AT EACH FLOOR LEVEL. RUN EXPOSED RACEWAYS PARALLEL WITH OR AT RIGHT ANGLES TO WALLS.
6. LEAVE WIRES WITH SUFFICIENT SLACK TO PERMIT MAKING FINAL CONNECTIONS. RACEWAYS OVER 10 FT LONG IN WHICH WIRING IS NOT INSTALLED: FURNISH FISH WIRE.
7. VERIFY LOCATIONS OF OUTLETS AND SWITCHES IN FINISHED ROOMS WITH ARCHITECTURAL DRAWINGS OF INTERIOR DETAILS AND FINISH. IN CENTERING OUTLETS AND LOCATING BOXES AND OUTLETS, ALLOW FOR OVERHEAD PIPES, DUCTS AND MECHANICAL EQUIPMENT, EQUIPMENT, VARIATIONS IN FIREPROOFING AND PLASTERING, WINDOW AND DOOR TRIM, PANELING, HUNG CEILINGS AND THE LIKE. CORRECT ANY INACCURACY RESULTING FROM FAILURE TO DO SO WITHOUT EXPENSE TO OWNER.
8. CONTRACTOR SHALL PROVIDE A WARRANTY ON ALL MATERIALS, EQUIPMENT, AND WORKMANSHIP FOR A PERIOD OF ONE YEAR FROM THE DATE OF FINAL ACCEPTANCE.
9. ALL UNUSED MATERIALS AND DEBRIS SHALL BE LEGALLY REMOVED AND DISPOSED OF AWAY FROM THE PREMISES ON A DAILY BASIS.
10. CONTRACTOR SHALL PATCH, PAINT, AND RESTORE EXISTING SURFACES DAMAGED DURING THE COURSE OF THIS CONSTRUCTION TO PRE-EXISTING CONDITIONS OR BETTER.
11. MINIMUM SIZE OF CONDUIT SHALL BE ¾", AND TYPE SHALL BE ELECTRICAL METALLIC TUBING (EMT), UNLESS OTHERWISE NOTED. PROVIDE NYLON DRAG LINE AND CONDUIT CAP FOR ALL EMPTY CONDUITS.
12. CONNECT CONDUIT TO MOTOR CONDUIT TERMINAL BOXES WITH FLEXIBLE CONDUIT (MINIMUM 18 IN. LENGTH AND 50% SLACK). DO NOT TERMINATE IN OR FASTEN RACEWAYS TO MOTOR FOUNDATION.
13. PULL AND JUNCTION BOXES WHERE INDICATED ON THE DRAWINGS, SHALL BE CONSIDERED SHOWN AT THEIR APPROXIMATE LOCATION. THE CONTRACTOR SHALL LOCATE THEM AS FIELD CONDITIONS DICTATE. ADDITIONAL PULL AND JUNCTION BOXES NOT SHOWN ON DRAWINGS SHALL BE PROVIDED WHERE REQUIRED BY APPLICABLE CODE PROVISIONS OR WHERE CALLED FOR BY FIELD CONDITIONS. PULL AND JUNCTION BOXES SHALL BE SURFACE TYPE IN UNFINISHED AREAS AND INSTALLED CONCEALED IN FINISHED AREAS, AND ALL COVERS TO PULL & JUNCTION BOXES SHALL BE READILY ACCESSIBLE.
14. SUPPORT PANEL, JUNCTION AND PULL BOXES INDEPENDENTLY TO BUILDING STRUCTURE WITH NO WEIGHT BEARING ON RACEWAYS.
15. FOR EXACT LOCATION AND MOUNTING HEIGHT OF LIGHTING FIXTURES AND SWITCH/RECEPTACLE OUTLETS, REFER TO ARCHITECTURAL REFLECTED CEILING AND POWER PLANS.
16. ALL ELECTRICAL ACCESSORIES AND EQUIPMENT INSTALLED OUTSIDE OR EXPOSED TO WEATHER SHALL HAVE NEMA 3R ENCLOSURES AND SHALL BE TIGHTLY GASKET FOR A COMPLETE RAIN TIGHT INSTALLATION. ALL BUILDING EXTERIOR MOUNTED RECEPTACLES SHALL BE GFCI RATED AND MOUNTED IN WEATHERPROOF ENCLOSURE.
17. ALL ACCESS PANEL LOCATIONS SHALL BE REVIEWED BY ARCHITECT PRIOR TO INSTALLATION.
18. ELECTRICAL CONTRACTOR SHALL COORDINATE THE LOCATION AND INSTALLATION OF NEW WORK WITH THE GENERAL CONTRACTOR AND OTHER ASSOCIATED TRADES IN A TIMELY MANNER. THE CONTRACTOR IS RESPONSIBLE FOR FIELD VERIFYING ALL DIMENSIONS AND CONDITIONS PRIOR TO CONSTRUCTION. REFER TO ALL GENERAL, MECHANICAL, AND ELECTRICAL, DRAWINGS AND SPECIFICATIONS FOR THIS PROJECT.
19. ALL CONDUITS AND EQUIPMENT TO BE CONCEALED IN FINISHED SPACES UNLESS OTHERWISE NOTED. CONDUITS SHALL BE ENCASED IN THE CONCRETE FLOOR SLAB.
20. ALL EQUIPMENT AND MATERIALS INSTALLED IN PLENUM CEILINGS SHALL BE APPROVED FOR THAT APPLICATION.
21. OUTLET BOXES AND JUNCTION BOXES ON OPPOSITE SIDES OF FIRE-RATED WALLS SHALL BE SEPARATED BY A HORIZONTAL DISTANCE OF NOT LESS THAN 24 INCHES, UNLESS FIRE-RATED BOXES OR PUTTY PADS ARE UTILIZED.
22. COORDINATE ALL FLOOR PENETRATIONS WITH THE STRUCTURAL AND ARCHITECTURAL DRAWINGS. CONFIRM PENETRATION LOCATIONS WITH THE ENGINEER AND OWNER BEFORE INSTALLATION.
23. COORDINATE THE MOUNTING HEIGHT AND LOCATION OF RACEWAYS, COMMUNICATIONS OUTLETS, AND RECEPTACLES WITH THE ARCHITECTURAL CASEWORK DRAWINGS AND DETAILS. COORDINATE LOCATIONS OF LIGHT FIXTURES, SWITCHES, AND RELATED DEVICES WITH THE ARCHITECTURAL DRAWINGS AND DETAILS.
24. REFER TO ARCHITECTURAL PLANS FOR FINAL LOCATIONS OF ALL LUMINARIES AND SWITCHES, AND FOR ALL FINISHED CEILING HEIGHTS.
25. REFER TO ARCHITECTURAL PLANS FOR FINAL LOCATIONS OF ALL ELECTRICAL DEVICES, AND FOR FINAL CEILING AND WALL HEIGHTS AND LAYOUTS.
26. LIGHTING FIXTURES PROVIDED WITH EMERGENCY BATTERY PACKS AND INDICATED WITH SWITCH CONTROL SHALL BE WIRED WITH BATTERY CHARGING/SENSING CIRCUIT WIRED AHEAD OF SWITCH CONTROL.
27. NUMBER(S) SHOWN AT RECEPTACLES, JUNCTION BOXES AND EQUIPMENT INDICATES CIRCUIT NUMBERS IN PANEL BOARD. PROVIDE WIRE AND CONDUIT TO INTERCONNECT EQUIPMENT AND DEVICES WITH SAME CIRCUIT NUMBERS AND RUN TO PANEL BOARD.

Property of NY Engineers

SHEET HISTORY SCHEDULE

| | | |
|---|---|---|
| | | |
| | | |
| | | |
| | | |
| | | |

ISSUE DATE: 10/16/2024 12:02:18 PM

RENOVATION BUILT -OUT

ZEITLIN'S DELICATESSEN

| | |
|---|---|
| DRAWN BY: | NYE |
| QAQC: | NYE |
| APPROVED BY: | NYE |
| PROJECT NUMBER: | 2432 |

ELECTRICAL SYMBOL LIST, ABBREVIATIONS & GENERAL NOTES

E0.1

# ELECTRICAL SPECIFICATIONS

1. GENERAL:

A. THE "GENERAL CONDITIONS OF THE CONTRACT FOR CONSTRUCTION," AIA DOCUMENT, LATEST EDITION, AND THESE SPECIFICATIONS AS APPLICABLE ARE PART OF THIS CONTRACT.

B. DRAWING ARE DIAGRAMMATIC AND INDICATE GENERAL ARRANGEMENT OF SYSTEMS AND WORK. CONDUIT ROUTING IS SHOWN DIAGRAMMATICALLY AND DOES NOT SHOW ALL OFFSETS, DROPS AND RISES OF RUNS. THE CONTRACTOR SHALL ALLOW IN HIS PRICE FOR ROUTING OF CONDUIT TO AVOID OBSTRUCTIONS. COORDINATION WITH EXISTING SERVICES, INCLUDING THOSE OF OTHER TRADES, IS REQUIRED, MAINTAIN HEADROOM AND SPACE CONDITIONS.

C. BIDDERS, BEFORE SUBMITTING PROPOSALS, SHALL VISIT AND CAREFULLY EXAMINE THE AREA AFFECTED BY THIS WORK TO FAMILIARIZE THEMSELVES WITH THE EXISTING CONDITIONS AND THE DIFFICULTIES THAT WILL ATTEND THE EXECUTION OF THIS WORK. SUBMISSION OF A PROPOSAL WILL BE CONSTRUED AS EVIDENCE THAT SUCH AN EXAMINATION HAS BEEN MADE, AND LATER CLAIMS WILL NOT BE RECOGNIZED FOR EXTRA LABOR, EQUIPMENT, OR MATERIALS, REQUIRED BECAUSE OF DIFFICULTIES ENCOUNTERED WHICH COULD HAVE BEEN FORESEEN HAD SUCH AN EXAMINATION BEEN MADE.

D. INSTALL WORK SO AS TO BE READILY ACCESSIBLE FOR OPERATION, MAINTENANCE AND REPAIR, MINOR DEVIATIONS FROM DRAWING MAY BE MADE TO ACCOMPLISH THIS, BUT CHANGES WHICH INVOLVE EXTRA COST SHALL NOT BE MADE WITHOUT APPROVAL.

E. REMOVAL AND RELOCATION OF CERTAIN EXISTING WORK MAY BE NECESSARY FOR THE PERFORMANCE OF THE GENERAL WORK. ALL EXISTING CONDITIONS CANNOT BE COMPLETELY DETAILED ON THE DRAWINGS. THE CONTRACTOR SHALL SURVEY THE SITE AND INCLUDE ALL CHANGES AND CHARGES IN MAKING UP THE WORK PROPOSAL.

F. CONNECTIONS TO EXISTING WORK: INSTALL NEW WORK AND CONNECT TO EXISTING WORK WITH MINIMUM INTERFERENCE TO EXISTING FACILITIES. TEMPORARY SHUTDOWNS OF EXISTING SERVICES SHALL BE PERFORMED AT NO ADDITIONAL CHARGES. AT TIMES NOT TO INTERFERE WITH NORMAL OPERATION OF EXISTING FACILITIES AND ONLY WITH WRITTEN CONSENT OF OWNER. ALARM AND EMERGENCY SYSTEMS SHALL NOT BE INTERRUPTED. MAINTAIN CONTINUOUS OPERATION OF EXISTING FACILITIES AS REQUIRED WITH NECESSARY TEMPORARY CONNECTIONS BETWEEN NEW AND EXISTING WORK. CONNECT NEW WORK TO EXISTING WORK IN NEAT AND ACCEPTABLE MANNER. RESTORE EXISTING DISTURBED WORK TO ORIGINAL CONDITION, INCLUDING MAINTENANCE OF WIRING CONTINUITY AS REQUIRED.

G. DISCONNECT, REMOVE AND/OR RELOCATE EXISTING MATERIAL, EQUIPMENT AND OTHER WORK AS NOTED OR REQUIRED FOR PROPER INSTALLATION OF NEW WORK.

H. THE CONTRACTOR SHALL KEEP ALL EQUIPMENT AND MATERIALS, AND ALL PARTS OF THE BUILDING EXTERIOR SPACES AND ADJACENT STREETS, SIDEWALKS AND PAVEMENTS, FREE FROM MATERIAL AND DEBRIS RESULTING FROM THE EXECUTION OF THIS WORK. EXCESS MATERIALS WILL NOT BE PERMITTED TO ACCUMULATE EITHER ON THE INTERIOR OR THE EXTERIOR.

I. SEAL OPENINGS THROUGH PARTITIONS, WALLS AND FLOORS WITH MINERAL WOOL OR OTHER NONCOMBUSTIBLE MATERIAL, UNLESS OTHERWISE NOTED.

J. PROVIDE ALL NECESSARY FLASHING AND COUNTER FLASHING TO MAINTAIN THE WATERPROOFING INTEGRITY OF THE BUILDING AS REQUIRED BY THE INSTALLATION OR REMOVAL OF CONDUIT AND EQUIPMENT, PROVIDE EQUIPMENT CURBS AS REQUIRED.

K. ALL EXISTING MATERIAL, EQUIPMENT AND CONSTRUCTION DEBRIS TO BE REMOVED UNDER THIS CONTRACT SHALL BECOME THE PROPERTY OF THE CONTRACTOR WITH THE EXCEPTION OF SPECIFIC EQUIPMENT ND APPARATUS REQUESTED BY THE BUILDING REPRESENTATIVE, ARCHITECT OR AS NOTED TO BE RELOCATED ON THE DRAWINGS. REMOVED EQUIPMENT SHALL BE PROPERLY DISPOSED OF BY THIS CONTRACTOR.

L. THE CONTRACTOR'S PROPOSAL FOR ALL WORK SHALL BE PREDICATED ON THE PERFORMANCE OF THE WORK DURING REGULAR WORKING HOURS. WHEN SO DIRECTED, HOWEVER, THE CONTRACTOR SHALL INSTALL WORK DURING OVERTIME HOURS AND THE ADDITIONAL COST TO BE CHARGED THEREFORE SHALL BE ONLY THE "PREMIUM" PORTION OF THE WAGES PAID.

M. UNLESS OTHERWISE SPECIFICALLY NOTED OR SPECIFIED, INCLUDE ALL CUTTING AND PATCHING OF EXISTING FLOORS, WALLS, PARTITIONS AND OTHER MATERIALS IN THE EXISTING BUILDING. THE CONTRACTOR SHALL RESTORE THESE AREAS TO ORIGINAL CONDITION.

N. ALL MATERIAL AND EQUIPMENT SHALL BE NEW UNLESS OTHERWISE NOTED AND SHALL BE IN ACCORDANCE WITH BUILDING STANDARDS.

O. INSURANCE: PROVIDE IN ACCORDANCE WITH OWNER/BUILDING REQUIREMENTS AND SHALL INCLUDE A HOLD HARMLESS CLAUSE FOR OWNER AND ENGINEER.

P. THE FINAL ACCEPTANCE SHALL BE MADE AFTER THE CONTRACTOR HAS ADJUSTED HIS EQUIPMENT, TESTED THE VARIOUS SYSTEMS, DEMONSTRATED THAT IT FULFILLS THE REQUIREMENTS OF THE DRAWINGS AND SPECIFICATIONS AND HAS FURNISHED ALL THE REQUIRED CERTIFICATED OF INSPECTION AND APPROVAL.

2. GENERAL PROVISIONS FOR ELECTRICAL WORK:

A. DEFINITIONS:

1) "PROVIDE": TO FURNISH, INSTALL AND CONNECT UP COMPLETE AND READY FOR SAFE AND REGULAR OPERATION THE PARTICULAR WORK REFERRED TO UNLESS SPECIFICALLY OTHERWISE NOTED.

2) "INSTALL": TO ERECT, MOUNT AND CONNECT COMPLETE WITH RELATED ACCESSORIES.

3) "FURNISH" OR "SUPPLY": TO PURCHASE, PROCURE, ACQUIRE. AND DELIVER COMPLETE WITH RELATED ACCESSORIES.

4) "WORK": LABOR, MATERIALS, EQUIPMENT, APPARATUS, CONTROLS, ACCESSORIES AND OTHER ITEMS REQUIRED FOR PROPER AND COMPLETE INSTALLATION.

5) "WIRING": RACEWAY. FITTINGS, WIRE, BOXES, AND RELATED ITEMS.

6) "CONCEALED": EMBEDDED IN MASONRY OR OTHER CONSTRUCTION, INSTALLED IN FURRED SPACES, WITHIN DOUBLE PARTITIONS OR HUNG CEILINGS, IN TRENCHES, IN CRAWL SPACES, OR IN ENCLOSURES.

7) "EXPOSED": NOT INSTALLED UNDERGROUND OR "CONCEALED" AS DEFINED ABOVE.

8) "SIMILAR" OR "EQUAL": EQUAL IN MATERIALS, WEIGHT, SIZE, DESIGN AND EFFICIENCY OF SPECIFIED PRODUCT.

B. TEMPORARY LIGHT AND POWER: PROVIDE TEMPORARY LIGHT AND POWER SYSTEMS AT EARLIEST POSSIBLE DATE WITHIN THE CONSTRUCTION AREAS FOR THE REQUIREMENTS OF ALL TRADES AS HEREIN DESCRIBED. EXTEND SYSTEMS TO NEW CONSTRUCTION AS SOON AS PHYSICALLY POSSIBLE. MAINTAIN SYSTEM DURING WORKING OWNER. PROVIDE ALL REQUIRED MAINTENANCE, INCLUDING LAMPS AND SOCKETS.

C. QUALITY ASSURANCE

1) QUALITY OF MATERIALS: ALL EQUIPMENT SHALL BE NEW SPECIFICATION GRADE, FREE FROM DEFECTS AND LISTED BY APPROVED TESTING AGENCY AND BEARING THEIR LABEL MATERIALS AND EQUIPMENT OF SIMILAR APPLICATION SHALL BE OF SAME MANUFACTURER, EXCEPT AS NOTED.

2) GUARANTEE: ALL MATERIALS AND WORKMANSHIP SHALL BE GUARANTEED AS DEFINED IN PARAGRAPH 2.C.

3) CURRENT CHARACTERISTICS:

a. SERVICE: 120/208 VOLT, 3 PHASE, 4 WIRE, 60 HERTZ WITH GROUNDED NEUTRAL.

b. DISTRIBUTION: 120/208 VOLT, 3 PHASE, 4 WIRE, 60 HERTZ WITH GROUNDED NEUTRAL.

4) HEIGHTS OF OUTLETS:

a. FROM FINISHED FLOOR TO CENTERLINE OF OUTLETS FOR:

– RECEPTACLES AND TELEPHONES: 1 FT–6 IN.

– WALL SWITCHES: 4 FT–0 IN.

– WALL FIXTURES: 7 FT–0 IN.

– MOTOR CONTROLLERS: 5 FT–0 IN.

– CLOCKS: 7 FT 6 IN

b. EXCEPTIONS: AT JUNCTION OF DIFFERENT WALL FINISH MATERIALS, ON MOLDING OR BREAK IN WALL SURFACE, IN VIOLATION OF CODE, OR AS NOTED OR DIRECTED.

D. PRODUCT DELIVERY, STORAGE AND HANDLING

1) MOVING OF EQUIPMENT: WHERE NECESSARY, SHIP IN CARTED SECTIONS OF SIZE TO PERMIT PASSING THROUGH AVAILABLE SPACES.

2) ACCESSIBILITY: FOR OPERATION, MAINTENANCE AND REPAIR, MINOR DEVIATIONS SHALL BE PERMITTED, CHANGES OF MAGNITUDE OR INVOLVING EXTRA COST ARE NOT PERMISSIBLE WITHOUT REVIEW. GROUP CONCEALED ELECTRICAL EQUIPMENT REQUIRING ACCESS WITH EQUIPMENT FREELY ACCESSIBLE THROUGH ACCESS DOORS.

E. MATERIALS

1) NAMEPLATES: PROVIDE BLACK LAMICOID SHEET WITH 3/4 IN. WHITE LETTERING, FASTENED WITH EPOXY CEMENT FOR EACH DISCONNECT SWITCH, CIRCUIT BREAKER, PANEL, CABINET, TRANSFORMER, ENCLOSURE, MOTOR CONTROLLER AND THE LIKE. NAMEPLATES SHALL DESCRIBE THE NAME AND NUMBER OF EACH COMPONENT.

2) CABLE TAGS: TAG EACH CONDUCTOR PASSING THROUGH SPLICE OR PULLBOX WITH A WHITE LINEN TAG, INDICATING POINT OF ORIGIN AND TERMINATION OF THE CIRCUIT.

3) INSERTS AND SUPPORTS:

a. INSERTS: STEEL, SLOTTED TYPE, FACTORY PAINTED.

– SINGLE ROD: SIMILAR TO GRINNELL FIG. 281.

– MULTI–ROD: SIMILAR TO FEE AND MASON SERIES 9000 WITH END CAPS AND CLOSURE STRIPS.

– CLIP FORM NAILS FLUSH WITH INSERTS.

– MAXIMUM LOADING 75 PERCENT OF RATING.

b. SUPPORTS FROM BUILDING CONSTRUCTION: INSERTS, BEAM CLAMPS, STEEL FISHPLATES (IN CONCRETE FILL ONLY), CANTILEVER BRACKETS OR OTHER MEANS. SUBMIT FOR REVIEW.

c. GROUPED LINES AND SERVICES: TRAPEZE HANGERS OF BOLTED ANGLES OR CHANNELS.

d. WHERE BUILDING CONSTRUCTION IS INADEQUATE: PROVIDE ADDITIONAL FRAMING. SUBMIT FOR REVIEW.

F. PAINT SHALL BE THE BEST GRADE FOR ITS PURPOSE. DELIVER IN ORIGINAL SEALED CONTAINERS AND APPLY IN ACCORDANCE WITH MANUFACTURER'S INSTRUCTIONS. COLORS SHALL BE AS SELECTED BY ARCHITECT OR ENGINEER. UTILIZE GALVANIZED IRON PRIMER ON PANEL AND PULL BOXES, AFTER FABRICATION. UTILIZE HOT DIPPED GALVANIZED OR DIPPED IN ZINC BASED PRIMER FOR: OUTLET BOXES, JUNCTION BOXES, CONDUIT HANGERS, RODS, INSERTS AND SUPPORTS. ZINC BASED PRIMER WITH FINISH TO MATCH SURROUNDINGS SHALL BE USED FOR MARRED SURFACES OF STEEL EQUIPMENT AND RACEWAYS. A FIELD–APPLIED ZINC BASED PRIME COAT SHALL BE UTILIZED FOR STEEL OR IRONWORK.

E. BRUSH AND CLEAN WORK PRIOR TO CONCEALING, PAINTING AND ACCEPTANCE. PAINTED EXPOSED WORK SOILED OR DAMAGED; CLEAN AND REPAIR TO MATCH ADJOINING WORK BEFORE FINAL ACCEPTANCE. REMOVE DEBRIS FROM INSIDE AND OUTSIDE OF MATERIAL AND EQUIPMENT.

F. FINAL LOCATIONS AND MOUNTING ORIENTATIONS OF ALL SWITCHES, RECEPTACLES AND LIGHT FIXTURES SHALL BE VERIFIED WITH ARCHITECT.

G. ALL ACCESS DOOR LOCATIONS SHALL BE REVIEWED BY ARCHITECT PRIOR TO INSTALLATION.

3. SCOPE OF WORK:

A. SCOPE OF WORK SHALL CONSIST OF PROVIDING LABOR, MATERIALS, EQUIPMENT, SERVICES AND FEES NECESSARY FOR COMPLETE AND SAFE INSTALLATION IN CONFORMING WITH THE NATIONAL ELECTRICAL CODE (NEC), AND ALL OTHER APPLICABLE INDUSTRY, NATIONAL AND LOCAL CODES AND AUTHORITIES HAVING JURISDICTION, AS INDICATED ON DRAWINGS AND HEREIN SPECIFIED.

B. ALL DRAWINGS, PLANS, DETAILS, SPECIFICATIONS AND SPECIFICATION ADDENDA ARE MADE PART OF THIS CONTRACT AND SHALL APPLY TO ALL WORK UNDER THE CONTRACT UNLESS OTHERWISE AMENDED, MODIFIED, SUPPLIED OR SPECIFIED HEREIN.

C. THE CONTRACTOR SHALL FURNISH A WRITTEN GUARANTEE TO REPLACE OR REPAIR PROMPTLY AND ASSUME RESPONSIBILITY FOR ALL EXPENSES INCURRED FOR ANY WORKMANSHIP AND EQUIPMENT IN WHICH DEFECTS DEVELOP WITHIN ONE YEAR FROM THE DATE OF FINAL CERTIFICATE FOR PAYMENT AND/OR FROM DATE OR ACTUAL USE OF EQUIPMENT OR OCCUPANCY OF SPACES BY OWNER INCLUDED UNDER THE VARIOUS PARTS OF THE WORK, WHICHEVER, DATE IS EARLIER. THIS WORK SHALL BE DONE AS DIRECTED BY THE OWNER. THIS GUARANTEE SHALL ALSO PROVIDED THAT WHERE DEFECTS OCCUR, THE CONTRACTOR WILL ASSUME RESPONSIBILITY OF OTHER TRADES AFFECTED BY DEFECTS, REPAIRS OR REPLACEMENTS IN EQUIPMENT SUPPLIED BY THE CONTRACTOR

D. THE CONTRACTOR SHALL GIVE NECESSARY NOTICE, FILE DRAWINGS AND SPECIFICATIONS WITH ALL DEPARTMENTS HAVING JURISDICTION, WORK AND PAY ALL FEES THEREFORE. THE CONTRACTOR SHALL ARRANGE FOR INSPECTION AND TESTS OF ANY OR ALL PARTS OF THE WORK IF SO REQUIRED BY AUTHORITIES AND PAY ALL CHARGES FOR SAME. THE CONTRACTOR SHALL PAY ALL COSTS FOR, AND FURNISH TO THE OWNER BEFORE FINAL BILLING, ALL CERTIFICATES NECESSARY AS EVIDENCE THAT THE WORK INSTALLED CONFORMS WITH ALL REGULATIONS WHERE THEY APPLY TO THIS WORK.

E. CONTRACTOR SHALL PERFORM ALL CONTROLLED INSPECTIONS IN ACCORDANCE WITH THE BUILDING CODE. SECURE ALL REQUIRED PERMITS AND APPROVALS AND TRANSMIT SAME TO OWNER. CONTRACTOR SHALL BE RESPONSIBLE FOR ALL FEES.

F. AREAS WITH NO ELECTRICAL WORK SHALL REMAIN AS IS. CONTRACTOR SHALL MAINTAIN CONTINUITY OF ALL ELECTRICAL SYSTEMS TO ALL AREAS NOT COVERED BY THIS RENOVATION AND SHALL PROVIDE 48 HOUR NOTICE TO LANDLORD OF ANY PLANNED POWER INTERRUPTIONS OR SIGNAL SYSTEM OUTAGES.

4. SHOP DRAWINGS

A. PRIOR TO THE INSTALLATION OF ANY WORK AND PROCUREMENT OF EQUIPMENT, CONTRACTOR SHALL PROVIDE COMPLETE SETS OF COORDINATED SHOP DRAWINGS OF ALL NEW AND EXISTING EQUIPMENT, INDICATING CAPACITY, DIMENSIONS AND SEQUENCE OF OPERATION FOR WRITTEN APPROVAL BY THE ARCHITECT AND ENGINEER.

B. INDICATE ON EACH SHOP DRAWINGS SUBMITTED:

1) PROJECT NAME AND LOCATION

2) NAME OF ARCHITECT AND ENGINEER

3) ITEM IDENTIFICATION

4) APPROVAL STAMP OF PRIME CONTRACTOR

C. SUBMISSIONS:

1) SUBMISSIONS 11 IN. X 17 IN. OR SMALLER: IF THE SUBMISSION IS A CATALOG CUT, THEN THE CONTRACTOR SHALL SUBMIT ONE ORIGINAL AND TWO COPIES. OTHERWISE, HE SHALL SUBMIT THREE COPIES. THE ARCHITECT WILL FORWARD THE ORIGINAL AND ONE COPY (TWO COPIES WHEN NO ORIGINAL IS RECEIVED) TO THE ENGINEER. ALL CATALOG CUTS SHALL BE COMPLETE.

2) SUBMISSIONS LARGER THAN 11 IN. X 17 IN.: SUBMIT TWO PRINTS AND ONE PAPER SEPIA TO THE ARCHITECT. THE ARCHITECT WILL FORWARD ONE PRINT AND THE PAPER SEPIA TO THE ENGINEER.

D. SUBMIT SHOP DRAWINGS FOR THE FOLLOWING:

1) SAFETY/DISCONNECT SWITCHES

2) FUSES

3) CIRCUIT BREAKERS

4) PANEL BOARDS/LOAD CENTER (INCLUDING DIMENSIONS, SCHEDULES, AND CATALOG CUTS).

5) RACEWAYS

6) WIRE AND CABLE

7) WALL SWITCHES

8) INSERTION RECEPTACLES

9) MOMENTARY CONTACT SWITCHES

10) TIME SWITCHES

11) LIGHTING FIXTURES.

E. ASSIST AND PROVIDE ALL NECESSARY INFORMATION, DIAGRAMS, SKETCHES, ETC. TO THE HVAC CONTRACTOR, FOR THE PREPARATION OF COORDINATED SHOP DRAWINGS INDICATING ROUTING OF FEEDERS, CONTROL CONDUITS, RECESSED FIXTURES AND ADJACENT NEARBY PIPING AND DUCTWORK WHERE APPLICABLE, CERTIFIED BY ALL TRADES THAT COORDINATION HAS BEEN ESTABLISHED. SUBMIT FOUR(4) BOOKBOUND OPERATING AND SERVICE MANUALS WHICH SHALL INCLUDE COPIES OF ALL SHOP DRAWING. PROVIDE SHOP DRAWINGS FOR PANELS, FIXTURES, WIRING DEVICES, CONDUIT, CABLE, DISCONNECT SWITCH, RELAYS, CONTRACTORS, AND OTHER SYSTEMS AS DIRECTED BY THE ENGINEER.

5. AS–BUILT DRAWINGS AND EQUIPMENT OPERATIONAL INSTRUCTIONS

A. UPON COMPLETION AND ACCEPTANCE OF WORK, CONTRACTOR SHALL FURNISH WRITTEN INSTRUCTIONS AND EQUIPMENT MANUALS AND DEMONSTRATE TO THE OWNER THE PROPER OPERATION AND MAINTENANCE OF ALL EQUIPMENT AND APPARATUS FURNISHED UNDER THIS CONTRACT.

B. THESE INSTRUCTIONS SHALL BE TYPED ON 8–1/2 IN. X 11 IN. PAPER AND BOUND IN THREE RING BINDERS WITH CLEAR ACETATE COVERS. CONTRACTOR SHALL GIVE THREE COPIES OF THE INSTRUCTIONS TO THE OWNER AND ONE COPY TO THE ENGINEER.

C. THE INSTRUCTION BOOKLET SHALL BEAR THE NAME, ADDRESS AND TELEPHONE NUMBER OF THE PROJECT, ARCHITECT AND ENGINEER.

D. REPRODUCIBLE "AS–BUILT" DRAWINGS SHALL BE PROVIDED INDICATING THE AS INSTALLED CONDITIONS OF THE WORK. "AS–BUILT" DRAWINGS SHALL BE PROVIDED TO THE ARCHITECT AFTER COMPLETION OF THE INSTALLATION.

6. LOW–VOLTAGE DISTRIBUTION EQUIPMENT:

A. PROVIDE COMPLETE EQUIPMENT INCLUDING: SWITCHES, FUSES, CIRCUIT BREAKERS, PANELS AND TRANSFORMERS.

B. ALL EQUIPMENT SHALL CONFORM TO NEMA, ANSI AND IEEE STANDARDS.

C. DISCONNECT SWITCHES SHALL BE FUSED OR NONFUSED AS NOTED. VOLTAGE SHALL BE AS REQUIRED. SWITCHES SHALL BE HEAVY DUTY, EXCEPT AS NOTED, AND HORSEPOWER RATED FOR MOTOR LOADS. TOGGLE TYPE SWITCHES SHALL BE NONFUSED, LOAD BREAK, HAVING MAXIMUM RATINGS OF 20 AMP AT 600 VOLTS AND 30 AMP AT 240 VOLTS. TWO–POLE SWITCHES SHALL BE SIMILAR TO HART AND HEGEMAN NO. 6808F. THREE–POLE SWITCHES SHALL BE SIMILAR TO HART AND HEGEMAN NO. 7810F. KNIFE–BLADE TYPE SWITCHES SHALL BE LOAD BREAK, QUICK–MAKE– QUICK–BREAK, UL CLASS R UP TO 600 AMP. MAXIMUM RATING EXCEPT AS NOTED SHALL BE 800 AMP. ARC QUENCHERS SHALL BE PROVIDED. SWITCHES SHALL BE SIMILAR TO GENERAL ELECTRIC QMR. ALL SWITCH ENCLOSURES SHALL BE DEAD FRONT, NEMA TYPE 1, EXCEPT AS NOTED.

7. FUSES:

A. CIRCUITS 0 TO 600 AMPERES SHALL BE PROTECTED BY FUSES SIMILAR TO CURRENT LIMITING BUSSMAN LOW–PEAK DUAL–ELEMENT TIME–DELAY LPN–RK (AMP)SP (250V) /LPS–RK (AMP)SP (600V) OR LPJ (AMP)SP (600V) (UL CLASS RK1 OR CLASS J), AND BE LISTED BY UL WITH AN INTERRUPTING RATING OF 300,000 AMPERES RMS SYMMETRICAL.

B. MOTOR CIRCUITS – ALL INDIVIDUAL MOTOR CIRCUITS WITH FULL LOAD AMPERE RATINGS (FLA) OF 480 AMPERES OR LESS SHALL BE PROTECTED BY FUSES SIMILAR TO CURRENT LIMITING BUSSMANN LOW–PEAK DUAL–ELEMENT TIME–DELAY LPN–RK (AMP)SP (250V) /LPS–RK (AMP)SP (600V) OR LPJ (AMP)SP (600V) (UL CLASS RK1 OR CLASS J), AND BE LISTED BY UL WITH AN INTERRUPTING RATING OF 300,000 AMPERES RMS SYMMETRICAL.

C. ALL FUSES SHALL BE PROVIDED BY SAME MANUFACTURER.

D. PROVIDE 1 SPACE MATCHING FUSE FOR EACH SET OF 3.

E. CIRCUIT BREAKERS: MOLDED CASE BREAKERS SHALL BE THERMAL–MAGNETIC, QUICK–MAKE–QUICK–BREAK, BOLT–ON TYPE, MANUALLY OPERATED WITH INSULATED TRIP–FREE HANDLE. MULTI–POLE TYPE BREAKERS SHALL CONTAIN INTERNAL TRIP BAR. TERMINALS SHALL BE SUITABLE FOR COPPER OR ALUMINUM CABLE. FURNISH AUXILIARY DEVICES WHERE REQUIRED FOR SHUNT–TRIPPING, OPEN A ND CLOSE MOTOR OPERATOR AND ALARM INDICATION. ENCLOSURES SHALL BE DEAD FRONT, NEMA TYPE 1, EXCEPT AS NOTED. FRAMES, IC AND INTERCHANGEABLE TRIPS SHALL BE AS FOLLOWS, UNLESS OTHERWISE NOTED:
1) 120 VOLTS, 100–AMP FRAME: 10,000 AMPS, 1 POLE.
2) 120/208 VOLTS, 225–AMP FRAME: 22,000 AMPS MINIMUM

8. DISTRIBUTION PANELBOARDS, CIRCUIT BREAKER TYPE:

A. THREE PHASE, 4 OR 5 WIRE, COPPER BUS BARS, WITH 2, 3, OR 4 WIRE BRANCHES, AS NOTED. CAPACITY OF PANEL AND CIRCUITS, AS NOTED BELOW. PANELBOARD TO HAVE GROUND BUS SAME SIZE AS PHASE BUSES.

B. CABINETS: CODE GAUGE GALVANIZED SHEET STEEL PRIMED AND PAINTED WITH TRIM AND DOOR, TYPE AS NOTED, LAP AND RIVET CORNERS OR FORM AS APPROVED.

C. TRIM: ONE PIECE FULL FINISH PRIMED AND PAINTED SHEET STEEL. TRIM SHALL BE MOUNTED WITH A CONTINUOUS PIANO HINGE CONFIGURED IN SUCH A MANNER THAT IT SHALL BE POSSIBLE TO GAIN FULL ACCESS TO CIRCUIT BREAKERS AND WIRING GUTTERS WITHOUT REMOVING THE TRIM. PROVIDE A MULTI–PIN CYLINDER LOCK (YALE, CORBIN OR EQUAL) TO LATCH THE TRIM. KEYS SHALL BE MILLED.

D. HARDWARE: MULTI–PIN, CYLINDER LOCKS WITH MILLED KEYS. ALL PANELS SHALL BE KEYED ALIKE. DOOR OVER 48" HIGH SHALL BE EQUIPPED WITH A CHROME PLATED VAULT HANDLE, BUILT–IN LOCK AND 3–POINT CATCH FASTENING DOOR AT TOP, BOTTOM AND CENTER.

E. HINGES: CONCEALED, CONTINUOUS PIANO HINGE AS DESCRIBED ABOVE.

F. DIRECTORY HOLDER: MEAL FRAME WITH NONBREAKABLE TRANSPARENT COVER AND DIRECTORY CARD. ENTRIES TO BE TYPEWRITTEN BY ELECTRICAL CONTRACTOR. PROVIDE AN ENGRAVED LAMINATED NAMEPLATE ADJACENT TO EACH BRANCH BREAKER. MOUNT WITH SELF TAPPING MACHINE SCREWS.

G. FURNISH MULTI–CABLE LUGS WHERE REQUIRED. DOUBLE LUGGING NOT PERMITTED. SECURE LUGS TO BUS BY STUD BOLTS.

H. PANELBOARD CONSTRUCTION FOR BOLTED TYPE BREAKERS. MINIMUM SHORT CIRCUIT RATING 25,000 AMPERES, RMS SYMMETRICAL FOR ALL 120/208V. APPLICATIONS. INDIVIDUAL CIRCUIT BREAKERS SHALL HAVE MINIMUM 100A FRAME, TRIPS SIZED AS SHOW ON THE PLANS.

I. MINIMUM GUTTER SPACES: PANELS WITH 225 AMPERE MAINS, 5–½" MINIMUM, 400 AMPERES AND OVER, MINIMUM GUTTERS 8". FOR PANELS WITH THROUGH FEEDERS, INCREASE GUTTER WIDTH BY 2" MINIMUM AND PROVIDE A SHEET STEEL BARRIER BETWEEN THE PANEL GUTTER AND THE THROUGH FEEDER PORTION OF THE BACK BOX. BRANCH CIRCUIT BREAKERS SHALL BE MECHANICALLY INTERLOCKED WHEN SHOWN ON DRAWINGS.

J. DISTRIBUTION AND SUB–DISTRIBUTION PANELBOARDS SHALL BE A MINIMUM OF 30" WIDE AND 10" DEEP.

K. PANELBOARD SHALL HAVE MAIN CIRCUIT BREAKER OR MAIN LUGS AS INDICATED ON THE DRAWINGS. QUANTITY, POLES AND TRIP RATINGS OF BRANCH CIRCUIT BREAKERS TO BE AS INDICATED ON DRAWINGS.

L. PANELBOARD SHALL HAVE ENGRAVED WHITE CORE, BLACK LAMACOID NAMEPLATE SCREWED ONTO PANE TRIM WITH DESIGNATION LISTED (PANELBOARD NAME, VOLTAGE, RATING OR MAINS IN AMPS).

9. DISTRIBUTION PANELBOARDS, SWITCH AND FUSE:

A. THREE PHASE, 3 OR 4 WIRE WITH COPPER BUS BARS. ALL THROUGH BUS SHALL BE INSULATED.

B. NEMA CLASS 1 CONSTRUCTION TO ACCOMMODATE FUSIBLE, INDIVIDUALLY ENCLOSED SWITCHES, FRONT REMOVABLE, SWITCH AND DOOR INTERLOCKS. COVERS TO BE PAD–LOCKABLE.

C. PANELBOARD SHALL BE CONSTRUCTED OF CODE–GAUGE STEEL, GRAY FINISH OVER RUST INHIBITOR, FOR SURFACE MOUNTING. BOX AND PANEL FRAME SHALL BE FLANGED AND REINFORCED FOR RIGID SUPPORT OF INTERIOR AND ACCURATE ALIGNMENT OF INTERIOR WITH FRONT. TRIMS TO BE FASTENED TO BACK BOX WITH SCREWS.

D. ALL BRANCH SWITCHES SHALL HAVE INDIVIDUAL ENGRAVED LAMICOID NAMEPLATES (BLACK WITH WHITE CORE).

E. DISTRIBUTION PANELBOARD CONSTRUCTION MINIMUM SHORT CIRCUIT RATING 25,000 AMPERES, REMS SYMMETRICAL FOR ALL 120/208V APPLICATIONS. APPLICATIONS.

F. DISCONNECTS

1) DISCONNECT SWITCHES SHALL CONFORM TO NEMA AND UL STANDARDS, AND SHALL BE HORSEPOWER RATED.

2) SWITCHING MECHANISM SHALL BE QUICK–MAKE, QUICK–BREAK, SINGLE THROW WITH EXTERNAL OPERATING HANDLE MECHANCIALLY INTERLOCKED WITH ENCLOSURE COVER TO PROVIDE ACCESS TO INTERIOR WHEN DISCONNECT IS IN OFF POSITION ONLY. PROVIDE MEANS TO LOCK OPERATING HANDLE IN THE OPEN AND CLOSED POSITION. DESIGNATE ON THE ENCLOSURE THE OPEN AND CLOSED POSITION OF THE OPERATING HANDLE.

3) SWITCHES SHALL BE OF THE DOUBLE STATIONARY CONTACT TYPE.

4) SWITCHES SHALL BE EQUIPPED WITH REJECTION TYPE FUSE HOLDERS, FUSIBLE AS SHOWN ON THE DRAWINGS; PROVIDE COMPLETE WITH FUSES AS SCHEDULED.

G. INSTALLATION

1) DISTRIBUTION PANELBOARD SHALL BE MOUNTED TO STRUCTURAL STEEL CHANNEL (KINDORF) WHICH SHALL BE BOLTED TO THE WALL USING EXPANSION ANCHORS FOR LARGE PANELS.

H. IDENTIFICATION

1) PROVIDE NAMEPLATE AT EACH SWITCH IDENTIFYING THE LOAD SERVED.

2) NAMEPLATES SHALL BE MOUNTED ON THE FRONT COVER SECURED WITH SELF–TAPPING SCREWS OR NUTS AND BOLTS. NAMEPLATES SHALL BE LAMINATED PHENOLIC, BLACK WITH A MINIMUM OF ¼" HIGH WHITE LETTERING.

I. DISTRIBUTION AND SUB–DISTRIBUTION PANELBOARDS SHALL BE A MINIMUM OF 30" WIDE AND 10" DEEP.

J. POWER PANELBOARDS SHALL BE SIMILAR TO GENERAL ELECTRIC TYPE "QMR", AS MANUFACTURED BY ATLAS SWITCH COMPANY, ELECTRIC SWITCHBOARD COMPANY OR APPROVED EQUAL.

K. PANELBOARD SHALL HAVE MAIN CIRCUIT BREAKER OR MAIN LUGS AS INDICATED ON THE DRAWINGS. QUANTITY, POLES AND TRIP RATINGS OF BRANCH CIRCUIT BREAKERS TO BE AS INDICATED ON DRAWINGS.

L. PANELBOARD SHALL HAVE ENGRAVED WHITE CORE, BLACK LAMACOID NAMEPLATE SCREWED ONTO PANE TRIM WITH DESIGNATION LISTED (PANELBOARD NAME, VOLTAGE, RATING OR MAINS IN AMPS).

B. MATERIALS

1) RACEWAYS:

a. RIGID STEEL CONDUIT: FULL–WEIGHT PIPE, GALVANIZED, THREADED.

b. ELECTRO–METALIC TUBING (EMT): THIN WALL PIPE, GALVANIZED, THREAD LESS.

c. FLEXIBLE STEEL CONDUIT: CONTINUOUS SINGLE STRIP, GALVANIZED.

d. WIRE–WAYS: WIRE SHALL BE AS NOTED, MINIMUM NO. 16 GAUGE STEEL WITH GROUND CONTINUITY. FINISH SHALL BE BAKED ENAMEL. COVERS SHALL BE SCREW–ON.

e. SURFACE METAL RACEWAY: SIZE AS NOTED. BASE 0.04 IN., COVER 0.25 IN. MATERIAL SHALL BE STEEL. FINISH SHALL BE BAKED ENAMEL. COVERS SHALL BE SCREW–ON.

2) FITTINGS AND ACCESSORIES:

a. RIGID STEEL: NONSPLIT, THREADED, STEEL OR MALLEABLE IRON. ZINC DIE CAST NOT PERMITTED.

b. ELECTRO–METALLIC TUBING: COMPRESSION TYPE. GALVANIZED RIGID STEEL ELBOWS, 2 IN. OR LARGER.

c. FLEXIBLE METALLIC CONDUIT: ANGLE WEDGE TYPE WITH INSULATED THROAT.

d. BUSHINGS: METALLIC INSULATED TYPE.

SHEET HISTORY SCHEDULE

| | | |
|---|---|---|
| | | |
| | | |
| | | |
| | | |
| | | |

ISSUE DATE: 10/16/2024 12:02:18 PM

RENOVATION BUILT -OUT

ZEITLIN'S DELICATESSEN

| | |
|---|---|
| DRAWN BY: | NYE |
| QAQC: | NYE |
| APPROVED BY: | NYE |
| PROJECT NUMBER: | 2432 |

ELECTRICAL SPECIFICATION (SHEET 1 OF 2)

E0.2

Property of NY Engineers

# ELECTRICAL SPECIFICATIONS (CONT.)

3) BOXES:

a. OUTLET BOXES: EXCEPT AS OTHERWISE REQUIRED BY CONSTRUCTION, DEVICES OR WIRING, BOXES SHALL BE STAMPED STEEL, 4 IN. SQUARE OR OCTAGON FOR FIXTURES. BOXES ABOVE CEILING SHALL BE 1-1/2 IN. DEEP. BOXES IN CEILING OR SLAB SHALL BE 3 IN. DEEP. BOXES IN WALL FOR FIXTURES SHALL BE 2-3/4 IN. DEEP. BOXES IN WALL FOR RECEPTACLES AND SWITCHES SHALL BE 1-1/2 IN. DEEP. FURNISH WITH RAISED COVERS AND FIXTURE STUDS WHERE REQUIRED. WITHOUT FIXTURE OR DEVICE: FURNISH BLANK COVER. OFFSET BACK-TO-BACK OUTLETS WITH MINIMUM 6 IN. SEPARATION.

b. JUNCTION AND PULL BOXES: GALVANIZED SHEET STEEL WITH SCREW-ON COVERS, EXCEPT AS NOTED. FURNISH WITH INSULATED SUPPORTS FOR CABLES. LOCATIONS SHALL BE AS NOTED OR REQUIRED AND ACCESSIBLE. PROVIDE BARRIERS IN NEW AND RENOVATED BOXES BETWEEN 120/208 VOLT AND 265/460 VOLT WIRING AND BETWEEN EMERGENCY AND NORMAL WIRING. FLOOR BOXES SHALL BE SUITABLE FOR CONDUIT AND DEVICES NOTED. RAISED OUTLETS SHALL BE HUBBELL #B2414 SERIES WITH ABOVE FLOOR FITTING. TELEPHONE: BUSHED HOLE. POWER: DUPLEX RECEPTACLE OR OTHER AS NOTED. INCREASE SIZE TO SUIT AS NECESSARY. FLUSH OUTLETS SHALL BE HUBBELL #B2414 SERIES WITH FLUSH FLOOR FITTING FOR TELEPHONE AND FLUSH DUAL FLAP COVER WITH DUPLEX RECEPTACLE FOR POWER AS NOTED. INCREASE SIZE TO SUIT AS NECESSARY.

C. PROVIDE RACEWAYS ONLY AS HEREIN SPECIFIED, EXCEPT AS NOTED. RACEWAYS SHALL BE RUN CONCEALED, EXCEPT AS NOTED.

PROVIDE RACEWAY SUPPORT UTILIZING CEILING TRAPEZE, STRAP HANGERS, OR WALL BRACKETS. PROVIDE U-BOLTS AT EACH FLOOR LEVEL OF RISER RACEWAYS AND CONNECTED TO ACCEPTABLE SUPPORTS. PROVIDE RISER CLAMPS AT EACH FLOOR LEVEL OF RISER RACEWAYS AND RESTING ON SLAB. FOR THROUGH-THE-FLOOR SYSTEMS, UTILIZE AN ASSEMBLY SIMILAR TO HUBBELL FIRE RATED POKE-THROUGH-FLOOR BOX SYSTEM. FOR ABOVE FLOOR FITTINGS TELEPHONE SHALL BE BUSHED HOLE AND POWER SHALL BE DUPLEX RECEPTACLE OR OTHER AS NOTED. PROVIDE SEPARATION BARRIER BETWEEN POWER AND TELEPHONE COMPARTMENTS. PROVIDE JUNCTION BOX ON UNDERSIDE OF FLOOR. PACK FITTING TO RESTORE FIRE RATING OF FLOOR.

SECURE ALL RACEWAYS TO SUPPORTS WITH PIPE STRAPS OR U-BOLTS. SPACING OF SUPPORTS SHALL BE A MINIMUM OF 10 FT ON CENTER FOR METALLIC RACEWAY AND AS REQUIRED FOR NONMETALLIC RACEWAY. SPACING SHALL BE 5 FT ON CENTER FOR WIREWAYS AND PER CODE AND AS NOTED FOR OTHERS. MOUNT SUPPORTS TO STRUCTURE MASONRY WITH TOGGLE BOLTS ON HOLLOW MASONRY, EXPANSION SHIELDS OR INSERTS IN CONCRETE AND BRICK, MACHINE SCREWS ON METAL, BEAM CLAMPS ON FRAMEWORK, WOOD SCREWS ON WOOD, AND PAN THROUGH STRAPS IN METAL DECK. NAILS, RAWL PLUGS OR WOOD PLUGS SHALL NOT BE PERMITTED. WHERE REQUIRED BY STRUCTURE, FURNISH THROUGH BOLTS AND FISHPLATES.

EXPOSED RACEWAYS SHALL BE RUN PARALLEL WITH OR AT RIGHT ANGLES TO WALLS. PROVIDE CLEARANCE WITH WATER, STEAM OR OTHER PIPING (MINIMUM 3 IN. SEPARATION FROM STEAM AND HOT WATER PIPES, EXCEPT 1 IN. FROM PIPE COVER AT CROSSINGS AND 18 IN. FOR PARALLEL RUNS). FOR HUNG CEILING OUTLETS, RUN IN HUNG CEILING AND CONNECT TO CEILING SUPPORT CHANNELS. IN MASONRY AND POURED CONCRETE, RUN VERTICALLY ONLY.

MAINTAIN GROUNDING CONTINUITY OF INTERRUPTED METALLIC RACEWAYS WITH GROUND CONDUCTOR, AND IN FLEXIBLE CONDUIT FOR FEEDERS AND MOTOR TERMINAL CONNECTIONS.

EMPTY RACEWAYS OVER 10 FT LONG: PROVIDE FISH OR PULL WIRE, GALVANIZED OR NYLON ROPE.

RIGID STEEL CONDUIT SHALL BE PERMITTED FOR FEEDERS AND BRANCH CIRCUITS. PAINT MALE THREADS OF FIELD-THREADED CONDUIT WITH GRAPHITE-BASE PIPE COMPOUND AND BUTT CONDUIT ENDS. TOUCH UP MARRED SURFACES AND FIELD-CUT THREADS, CRC-COLD GALVANIZED. EMT SHALL BE PERMITTED FOR BRANCH CIRCUITS ONLY, IN DRY LOCATIONS, DRY WALLS, HUNG CEILINGS, HOLLOW BLOCK WALLS AND FURRED SPACES. EMT SHALL NOT BE PERMITTED IN RAISED FLOORS. FLEXIBLE STEEL CONDUIT SHALL BE UTILIZED FOR SHORT CONNECTIONS WHERE RIGID CONDUIT IS IMPRACTICAL. FROM OUTLET BOX TO RECESSED LIGHTING FIXTURE: PROVIDE MINIMUM 4 FT AND MAXIMUM 6 FT LENGTHS. FOR FINAL CONNECTION TO MOTOR TERMINAL BOX, TRANSFORMER AND OTHER VIBRATING EQUIPMENT: PROVIDE WITH POLYVINYL SHEATHING AND GROUND CONDUCTOR. MINIMUM LENGTH: 18 IN. WITH SLACK. CONNECT GROUND CONDUCTOR TO ENCLOSURE OR RACEWAY AT EACH END. FOR EXPANSION JOINT CROSSINGS, CROSS AT RIGHT ANGLES AND ANCHOR ENDS.

CUT CONDUIT ENDS SQUARE. REAM SMOOTH. PAINT MALE THREADS OF FIELD THREADED RACEWAYS WITH GRAPHITE BASE PIPE COMPOUND. DRAW UP TIGHT WITH RACEWAY COUPLING.

ALL COUPLINGS SHALL BE COMPRESSION TYPE. NO SET SCREW FITTINGS.

EXPANSION FITTINGS SHALL BE INSTALLED AT RIGHT ANGLES WITH CLIP JOINT CENTERED IN EXPANSION JOINT. PROVIDE A LENGTH OF RUN IN ACCORDANCE MANUFACTURER'S RECOMMENDATIONS. PRESET FITTINGS SHALL ALLOW FOR TEMPERATURE VARIATION.

RACEWAYS PASSING THROUGH FIRE-RATED CONSTRUCTION: SEAL OPENING WITH FIRE SEALANT.

D. PROVIDE CABLE SUPPORTS IN ACCORDANCE WITH NATIONAL ELECTRIC CODE ARTICLE 300.19. CABLE SUPPORTS SHALL UTILIZE A ONE-PIECE PLUG WITH POZI-GRIP WEDGING PLUG AS MANUFACTIURED BY OZ-GEDNEY. TYPE SF SHALL BE USED FOR ARMORED CABLE.

INSTALL CABLE SUPPORTS AT THE TOP OF A VERTICAL RISE AND PROVIDE INTERMEDIATE ADDITIONAL SUPPORTS AS REQUIRED TO LIMIT SUPPORTED CONDUCTOR LENGTHS TO NOT GREATER THAN THOSE SPECIFIED IN TABLE 300.19(A).

A. ERECT WALL AND SWITCH OUTLETS IN ADVANCE OF FURRING AND FIREPROOFING. OUTLET BOXES SHALL BE SET SQUARE AND TRUE WITH BUILDING FINISH. SECURE TO BUILDING STRUCTURE BY ADJUSTABLE STRAP IRON OR GROUT IN WITH MASONRY. VERIFY OUTLET LOCATIONS IN FINISHED SPACES WITH ARCHITECTURAL DRAWINGS OF INTERIOR DETAILS AND FINISHES. PROVIDE BARRIERS BETWEEN SWITCHES CONNECTED TO DIFFERENT PHASES FOR VOLTAGES EXCEEDING 150 VOLTS TO GROUND.

B. PANEL, JUNCTION AND PULL BOXES SHALL BE LOCATED CLEAR OF OTHER TRADES. CONCEAL JUNCTION AND PULL BOXES IN FINISHED SPACES. WHERE NECESSARY, REROUTE RACEWAYS OR MAKE OTHER ARRANGEMENTS FOR CONCEALMENT. BOXES SHALL BE ACCESSIBLE. SUPPORT BOXES FROM BUILDING STRUCTURE, INDEPENDENT OF CONDUIT. PROVIDE FLOOR-TO-CEILING CHANNELS FOR MOUNTING ON DRYWALL AND LIGHTWEIGHT CONSTRUCTION. OUTLET BOXES FOR FIXTURES RECESSED IN HUNG CEILINGS SHALL BE ACCESSIBLE THROUGH OPENING CREATED BY REMOVAL OF FIXTURE. SECURE TO BLACK IRON SUPPORT. MOTOR TERMINAL BOXES: COORDINATE WITH MOTOR BRANCH CIRCUIT CONDUIT AND WIRING; ADD BOX VOLUME WHERE REQUIRED.

C. FIRE SEALANTS: PROVIDE FOR RACEWAYS AND WIRE PASSING THROUGH FLOOR SLOTS, SLEEVES OR OPENINGS IN FIRE-PARTITIONS ROOMS.

D. PERFORM CONTINUITY TESTS OF RESISTANCE OF FEEDER CONDUITS FROM SERVICE TO POINT OF FINAL DISTRIBUTION USING 1 CONDUCTOR RETURN. MAXIMUM RESISTANCE SHALL BE 25 OHMS.

9. WIRE AND CABLE:

A. PROVIDE WIRE AND CABLE COMPLETE WITH ACCESSORIES. SIZE REFERENCE SHALL BE AWG EXCEPT AS NOTED.

B. CONDUCTORS SHALL BE COPPER, ASTM STANDARD SOLID (NO. 10 AND SMALLER) OR STRANDED (NO. 8 AND LARGER). GENERAL USE CABLING SHALL BE NO. 12 MINIMUM. AT 120 VOLTS AND OVER 100 FT CIRCUIT LENGTH PROVIDE NO. 10 MINIMUM. AT 265 VOLTS AND OVER 200 FT CIRCUIT LENGTH PROVIDE NO. 10 MINIMUM.

C. CONTROL AND ALARM CABLING, EXCEPT AS NOTED, SHALL BE NO. 14 MINIMUM. AT 120 VOLTS AND OVER 200 FT CIRCUIT LENGTH PROVIDE NO. 12 MINIMUM. OTHER VOLTAGES AND PHASES: ADJUST CABLE SIZING AS REQUIRED TO MAINTAIN VOLTAGE DROP. INCREASE RACEWAY SIZES FOR LARGER WIRE AS REQUIRED.

D. INSULATION SHALL BE RUBBER AND THERMOPLASTIC MEETING ASTM AND IPCEA STANDARDS. TYPE THW OR THWN SHALL BE UTILIZED FOR FEEDERS AND BRANCH CIRCUITS EXCEPT AS NOTED. TYPE SFF-2 SHALL BE UTILIZED FOR BRANCH CIRCUITS LOCATED IN WIRING CHANNELS OF CONTINUOUS FLUORESCENT FIXTURES AND IN AMBIENT TEMPERATURES OVER 90 DEG C. FOR UNGROUNDED ISOLATED BRANCH CIRCUITS PROVIDE CROSS-LINKED POLYETHYLENE INSULATION (TYPE XHHW).

E. ARMORED CABLE (BX) SHALL BE UTILIZED FOR BRANCH CIRCUITS IN DRY HOLLOW LOCATIONS, HUNG CEILINGS, AND BLOCK WALLS. WHEN USED IN LIEU OF WIRING IN CONDUIT, STATE IN PROPOSAL THAT PRICE IS BASED UPON THE USE OF HOSPITAL GRADE 'BX'.

F. COLOR CODING SHALL BE AS FOLLOWS:

120/208 VOLT SYSTEM: :
BLACK FOR A PHASE
RED FOR B PHASE
BLUE FOR C PHASE

1) NEUTRAL WIRE SHALL UTILIZE WHITE OUTER COVERING THROUGHOUT. EQUIPMENT GROUND WIRE SHALL UTILIZE GREEN OUTER COVERING THROUGHOUT.

WHERE COLOR-CODED CABLE IS NOT AVAILABLE, CERTIFY IN WRITING AND REQUEST PERMISSION TO OVERLAP CONDUCTORS WITH 6 IN. OF COLOR TAPING IN ACCESSIBLE LOCATIONS.

G. PROVIDE FLAMEPROOF LINEN OR FIBER TAGS IN ACCESSIBLE LOCATIONS. FOR FEEDERS INDICATE FEEDER NUMBER, SIZE, PHASE AND POINTS OF ORIGIN AND TERMINATIONS. FOR CONTROL AND ALARM WIRING INDICATE TYPE (CONTROL OR ALARM), SIZE OF WIRE, AND POINTS OF ORIGIN AND TERMINATIONS.

H. TERMINATIONS, SPLICES AND TAPS UNDER 600 VOLTS: COPPER CONDUCTORS NO. 10 AND SMALLER SHALL UTILIZE COMPRESSION-TYPE OF TWIST-ON SPRING-LOADED CONNECTORS AND CLEAR NYLON-INSULATED COVERING. COPPER CONDUCTORS NO. 8 AND LARGER SHALL UTILIZE MECHANICAL BOLTED PRESSURE OR HYDRAULIC COMPRESSION TYPE USING MANUFACTURER'S RECOMMENDED TOOLING. CABLE LUGS AND CONNECTORS SHALL UTILIZE COMPRESSION TYPE OF SAME METAL AS CONDUCTOR. PROVIDE TO MATCH CABLE, WITH MARKING INDICATING SIZE AND TYPE. COPPER LUG CONNECTIONS TO BUS BARS: USE ANTISEIZE COMPOUND ON TANG.

I. NOT MORE THAN 3 LIGHTING OR CONVENIENCE OUTLET CIRCUITS SHALL BE INSTALLED IN ONE CONDUIT UNLESS OTHERWISE INDICATED. PULL NO THERMOPLASTIC WIRES AT TEMPERATURES LOWER THAN 32 DEG F. PROVIDE SEPARATE RACEWAYS FOR CONDUCTORS OF 120/208 AND 265/460 VOLT SYSTEMS, EXCEPT 460 VOLT MOTOR BRANCH CIRCUIT WIRING AND RELATED 120 VOLT CONTROL WIRING. THERMOPLASTIC WIRES SHALL NOT BE INSTALLED IN COMPUTER AREA RAISED FLOORS.

J. LEAVE WIRES WITH SUFFICIENT SLACK TO PERMIT MAKING FINAL CONNECTIONS.

K. PERFORM CONTINUITY AND INSULATION TESTS. MEGGER TEST 100 PERCENT OF FEEDERS, 10 PERCENT OF BRANCH CIRCUITS AND ALL MOTOR BRANCH CIRCUITS OVER 25 HP.

PERFORM TESTS PRIOR TO CONNECTING EQUIPMENT AND IN PRESENCE OF AUTHORIZED REPRESENTATIVES. SUBMIT WRITTEN REPORT OF RESULTS. CORRECT OR REPLACE CABLE TESTING BELOW MANUFACTURER'S STANDARDS.

10. WIRING DEVICES:

A. WIRING DEVICES SHALL BE SPECIFICATION GRADE UNLESS OTHERWISE SPECIFIED. ALL DEVICES SHALL BE FLUSH MOUNTED, UNLESS OTHERWISE NOTED. PROVIDE COMPLETE MATERIAL AND ACCESSORIES AS NOTED.

B. LOCAL WALL SWITCHES SHALL BE ROCKER TYPE, QUIET OPERATING, RATED 20 AMP, 120/277 VOLT, AC. SIMILAR TO LEVITON DECORA SERIES A5621 (SINGLE POLE), A5623 (3-WAY) AND A5624 (4-WAY).

C. STRAIGHT BLADE RECEPTACLES SHALL BE COMMERCIAL SPECIFICATION GRADE DUPLEX CONVENIENCE 125 VOLTS, 2 POLE, 3 WIRE, U GROUND SLOT, DECORA SERIES BY LEVITON. GROUNDED, EXCEPT AS NOTED.

1)SINGLE GANG, RECESSED, DUPLEX RECEPTACLE: TAMPER RESISTANT, 2-POLE, 3-WIRE GROUNDING, 15A, 125V, NEMA 5-20R; LEVITON 689 SERIES (COLOR AS SPECIFIED BY ARCHITECT).
2) USB CHARGER/ DUPLEX TAMPER-RESISTANT RECEPTACLE: TAMPER RESISTANT,

D. DEVICE PLATES: SEE ARCHITECT FOR TYPE. FOR RECEPTACLES WITH OTHER THAN 120 VOLT, INSCRIBED VOLTAGE AVAILABLE.

E. COLORS: COORDINATE COLORS WITH ARCHITECT.

F. MOUNTING ORIENTATION OF RECEPTACLES (HORIZONTAL OR VERTICAL): COORDINATE WITH ARCHITECT.

11. LIGHTING FIXTURES:

A. FIXTURES TO BE AS SPECIFIED BY ARCHITECT AND SHALL BE COMPLETELY FACTORY ASSEMBLED, WIRED AND EQUIPPED WITH ALL NECESSARY SOCKETS, BALLASTS, SUPPORTING HARDWARE AND ACCESSORIES. REFER TO DRAWINGS FOR INDIVIDUAL FIXTURE DESCRIPTIONS.

B. FIXTURE CATALOG NUMBERS USED TO ILLUSTRATE EQUIPMENT TYPE DO NOT NECESSARILY DENOTE REQUIRED MOUNTING EQUIPMENT OR ACCESSORIES. PROVIDE ACCESSORIES TO SUIT.

C. BALLAST: CLASS P, HIGH POWER FACTOR, LOWEST AVAILABLE NEMA RATED NOISE LEVEL, ET1 AND CBM APPROVED. ENERGY SAVING TYPE. TRIGGER START FOR 24-INCH LAMPS AND RAPID START FOR 48-INCH. TWO LAMP BALLASTS; NO THREE LAMP BALLASTS. BALLASTS SHALL BE ADVANCE MAGNETEK, UNIVERSAL OR EQUAL.

D. LED DRIVERS SHALL BE ELECTRONIC TYPE, LABELED AS COMPLIANT WITH RADIO FREQUENCY INTERFERENCE (RFI) REQUIREMENTS OF FCC TITLE 47, PART 15 AND COMPLY WITH NEMA SSL 1 "ELECTRONIC DRIVERS FOR LED DEVICES, ARRAYS OR SYSTEMS". LED DRIVERS SHALL HAVE A SOUND RATING OF "A", HAVE A MINIMUM EFFICIENCY OF 85% AND BE RATED FOR A THD OF LESS THAN 20% AT ALL INPUT VOLTAGES.

E. DIMMABLE LED DRIVERS SHALL BE CAPABLE OF DIMMING WITHOUT LED STROBING OR FLICKER ACROSS THEIR FULL DIMMING RANGE. PROVIDE TYPE OF LED DRIVER AS PER LIGHTING FIXTURE SCHEDULE, DIMMABLE LED DRIVERS SHALL BE 0-10V WHERE NOT INDICATED.

F. CONTINUOUS ROW, TWO LAMP STRIP FIXTURES SHALL BE STAGGERED TYPE.

G. FLUORESCENT LIGHTING FIXTURES, INCLUDING GENERAL CONSTRUCTION, LAMPS AND BALLASTS SHALL CONFORM TO THE ENERGY EFFICIENCY REQUIREMENTS OF CONSOLIDATED EDISON CO. AND QUALITY FOR A UTILITY REBATE TO OWNER UNDER CON EDISON'S ENLIGHTENED ENERGY LIGHTING REBATE PROGRAM. CONTRACTOR SHALL COORDINATE REBATE PROGRAM WITH CON EDISON AND ARRANGE FOR CON EDISON TO PERFORM A SURVEY TO INVENTORY ALL EXISTING FIXTURES PRIOR TO DEMOLITION.

H. EXIT SIGNS SHALL BE PRECISION DIE-CAST ALUMINUM HOUSING WITH LASER-FORMED ACRYLIC LEGEND. EXIT SIGNS SHALL COMPLY WITH UL 924 AND BE MEA APPROVED. AC POWERED WITH PREMIUM LONG-LIFE NICKEL CADMIUM BATTERY WITH STANDARD UL LISTED 3-HOUR RUN TIME. PROVIDE WITH INTEGRAL AUTOMATIC CHARGER IN A SELF CONTAINED POWER PACK. LED INDICATOR WITH PUSH TO TEST SWITCH.

12. TELEPHONE CONDUIT SYSTEM:

A. PROVIDE COMPLETE SYSTEM OF RACEWAYS AND ACCESSORIES, OUTLET BOXES, SLEEVES AND FISHWIRES.

B. EQUIPMENT SHALL CONFORM TO REQUIREMENTS OF TELEPHONE COMPANY.

C. OUTLETS SHALL BE:
1) WALL; 4 IN. SQUARE WITH BUSHED COVER PLATE.

D. PROVIDE FISHWIRES, IN RACEWAYS OVER 10 FT LONG.

E. CONDUIT SHALL BE 3/4 IN. MINIMUM. FURNISH EMPTY CONDUIT FROM OUTLET BOX TO BUSHED END THRU WALL 6" BELOW THE PLASTER CEILING.

F. FACE RACEWAYS IN ROOMS SHALL HUBBELL HBL500, HBL750 OR HBL2000 SERIES OR AS ACCEPTABLE.

14. PANEL BOARDS:

A. PANELBOARDS SHALL BE OF THE DEAD FRONT TYPE MANUFACTURED IN CODE GAUGE AND SIZE BOXES FOR MOUNTING AS INDICATED ON PLANS COMPLETE WITH TRIM, DOORS AND LOCKS. ALL LOCKS SHALL BE KEYED ALIKE.

B. CIRCUIT BREAKERS SHALL BE OF THE BOLT-ON THERMAL MAGNETIC MOLDED CASE TYPE, AND SHALL HAVE THE TRIP RATINGS AND NUMBER OF POLES SHOWN IN SCHEDULES ON THE CONTRACT DRAWINGS. FOR BLANK (SPACE) COMPARTMENTS, PROVIDE FULL RATED BUS. MINIMUM GUTTER SPACES SHALL BE 5-3/4". SIDES, TOP AND BOTTOM, INCREASE FOR THROUGH FEEDERS. PROVIDE 25% COPPPER GROUND BUS AND 100% COPPER NEUTRAL BUS AND INCREASE NEUTRAL BUS INDICATED.

C. LOCKING TABS SHALL BE PROVIDED ON ALL CIRCUIT BREAKERS SERVING EMERGENCY LIGHTING, FIRE ALARM SYSTEM, SECURITY SYSTEMS AND OTHER EMERGENCY OR CRITICAL EQUIPMENT AND AS NOTED ON THE CONTRACT DRAWINGS. A TOTAL OF 5 SPARE LOCKING TABS SHALL BE FURNISHED TO THE OWNER.

D. BUSES SHALL BE HARD DRAWN COPPER OF 98 PERCENT CONDUCTIVITY AND SHALL HAVE CROSS SECTIONAL AREAS LARGE ENOUGH TO LIMIT THE TEMPERATURE RISE, WHEN CARRYING FULL LOAD, TO 35 DEGREES C. ABOVE AN AMBIENT INSIDE THE ENCLOSURE OF 55 DEGREES C. AS DEFINED IN IEEE STANDARD RULES. MAIN BUS CAPACITY SHALL BE AS SHOWN ON THE CONTRACT DRAWINGS.

E. ENCLOSURES SHALL BE SURFACE OR FLUSH AS INDICATED. TRIMS SHALL BE SECURED TO PANEL WITH MACHINE SCREWS. COVERS SHALL BE HINGED DOOR-IN-DOOR CONSTRUCTION WITH CYLINDER LOCKS AND CATCHES. LOCKS MUST BE COMPATIBLE WITH BUILDING STANDARD KEY SYSTEM AND WHEN NONE EXISTS, THEY SHALL BE SIMILAR TO A YALE NO. 911 KEY.

F. DISTRIBUTION AND SUB-DISTRIBUTION PANELBOARD SHALL BE A MINIMUM OF 30" WIDE AND 10" DEEP.

G. ALL STANDARD PANELBOARDS SHALL BE A MINIMUM OF 20" WIDE AND 5 3/4" DEEP.

H. FURNISH ALL PANELBOARDS WITH FEED-THRU LUGS UNLESS OTHERWISE INDICATED ON THE DRAWINGS.

I. ALL NEW PANELBOARDS SHALL BE PROVIDED WITH AN ENGRAVED WHITE CORE LAMACOID NAMEPLATE, WITH 3/4 IN. WHITE LETTERING ON A BLACK BACKGROUND, WITH DESIGNATION LISTED (PANELBOARD NAME), FASTENED WITH EPOXY CEMENT OR OVAL HEAD CHROME PLATED MACHINE SCREWS.

J. THE CIRCUIT DIRECTORY SHALL BE TYPEWRITTEN AND PROVIDED INSIDE EACH PANEL DOOR TO INDICATE EQUIPMENT AND/OR AREA SERVED. DIRECTORY HOLDER SHALL BE METAL FRAME WITH CLEAR PLASTIC, TRANSPARENT COVER. THE TYPEWRITTEN LIST INDICATING CIRCUIT NUMBERS, OUTLETS SUPPLIED AND THEIR LOCATIONS SHALL BE PROVIDED.

K. TIE-BARS SHALL NOT BE USED TO CREATE MULTI-POLE CIRCUITS. MAXIMUM 42 CIRCUITS ALLOWED.

L. ONLY ONE WIRE SHALL BE INSTALLED UNDER EACH CIRCUIT BREAKER LUG.

M. SHORT CIRCUIT RATING OF PANELBOARDS SHALL NOT BE LESS THAN AS INDICATED ON THE CONTRACT DRAWINGS OR SPECIFIED HEREIN. WHERE NOT INDICATED OR SPECIFIED THE MINIMUM SHORT CIRCUIT RATING SHALL BE EQUAL TO THE INTERRUPTING CAPACITY OF THE LOWEST RATED CIRCUIT BREAKER IN THE PANELBOARD, BUT IN NO CASE LESS THAN 10,000 AMPERES R.M.S. SYMMETRICAL FOR 208Y/120 VOLT SYSTEM AND 14,000 AMPERES R.M.S. SYMMETRICAL FOR 480Y/277 VOLT SYSTEM. SERIES RATED PANELBOARDS SHALL BE USED TO ACHIEVE REQUIRED SHORT CIRCUIT RATINGS.

N. FOR ALL EXISTING PANELBOARDS, CONTRACTOR SHALL PROVIDE NEW CIRCUIT BREAKERS TO REPLACE EXISTING AS REQUIRED AS INDICATED ON DRAWINGS.

Property of NY Engineers

SHEET HISTORY SCHEDULE

| | | |
|---|---|---|
| | | |
| | | |
| | | |
| | | |
| | | |

ISSUE DATE: 10/16/2024 12:02:18 PM

RENOVATION BUILT -OUT

ZEITLIN'S DELICATESSEN

| | |
|---|---|
| DRAWN BY: | NYE |
| QAQC: | NYE |
| APPROVED BY: | NYE |
| PROJECT NUMBER: | 2432 |

ELECTRICAL SPECIFICATION (SHEET 2 OF 2)

E0.3

## LIGHT FIXTURE SCHEDULE

| TAG | FIXTURE DETAIL | MAKE | MODEL | WATTAGE | COMMENTS | NOTES |
|---|---|---|---|---|---|---|
| L01 | 2' x 4" SUSPENDED CEILING GRID LAY-IN-GRID | LITHONIA | 2GTL | 34.1 | OR APPROVED EQUAL | 1 |
| L02 | 2'x2' SUSPENDED CEILING GRID LAY-IN-LIGHT FIXTURE | TBD | TBD | 48 | - | 1 |
| L03 | LENS LARGE PENDANT LIGHT | ZERO | LED 973LM BLACK HFF | 14 | - | 1 |
| L05 | 4FT LINEAR PENDANT | MARK ARCHITECTURAL | S4LI-LLP-4FT-MSL4-I35K-BLK | 39.12 | NIGHT LIGHT AS REQ. | 1 |
| L06 | MONOPOINT TRACK HEAD | LUMENTURE | TS0-30H-1100-40-S-J | 14 | - | 3 |
| L09 | CROWN MOULDING LED | TBD | TBD | 5W/METER | | 1,4 |
| L10 | VANITY SCONCE | LITHONIA | FMVCSLS-24IN-MVOLT-35K-90CRI-BN-M6 | 27 | | 1 |
| EM | EMERGENCY BUG EYE LIGHT | - | - | - | - | 1,2 |
| EX | EXIT LIGHT | - | - | - | - | 1,2 |

NOTES :

1. COORDINATE/VERTIFY EXACT MAKE/MODEL NUMBER WITH THE OWNER/ARCHITECT.
2. THE LIGHT FIXTURE SHALL HAVE MINIMUM OF 90MNTS OF BATTERY BACKUP.
3. COORDINATE REQUIREMENT OF THE CURRENT LIMITER WITH THE VENDOR AND PROVIDE AS NEEDED.
4. PROVIDE ADAPTER IF REQUIRED.

## LIGHT SWITCHING SCHEDULE

| CIRCUIT # | CONTACTOR/RELAY# | AUTOMATIC CONTROL | SWITCH# | SWITCH TYPE | LOCATION | LOAD IN VA | NOTES |
|---|---|---|---|---|---|---|---|
| A#27 | CONTACTOR#1 | TIME CLOCK | $1 | REGULAR | SERVVICE COUNTER | 88 | 1 |
| A#27 | CONTACTOR#1 | TIME CLOCK | $2 | REGULAR | SERVVICE COUNTER | 373 | 1 |
| A#27 | CONTACTOR#1 | TIME CLOCK | $3 | REGULAR | KITCHEN | 383 | 1 |
| A#27 | CONTACTOR#1 | TIME CLOCK | $6 | REGULAR | DRY STORAGE ENTRANCE | 156 | 1 |
| A#27 | - | OCCUPANCY SENSOR | $7 | - | STORAGE | 40 | 2 |
| A#27 | - | OCCUPANCY SENSOR | $4 | - | F-TOILET | 96 | 2 |
| A#27 | - | OCCUPANCY SENSOR | $5 | - | M-TOILET | 48 | 2 |

1 - COORDINATE EXACT LOADING CAPACITY OF THE SWITCH AND SENSOR WITH THE VENDOR.
2 - NUMBER OF SENSOR AND SWITCHES REQUIRED MAY VARY BASED ON THE LOADING CAPACITY OF THE SENSOR AND SWITCH.

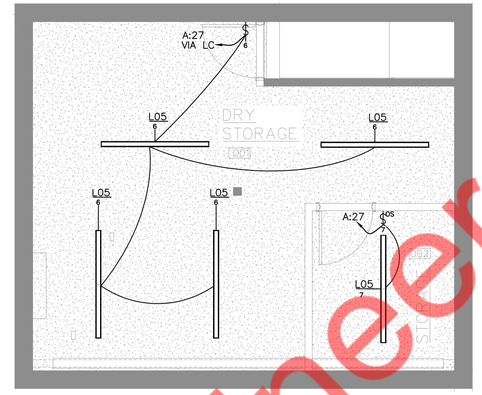


1 E1.0 ELECTRICAL LIGHTING PLAN - BASEMENT
SCALE: 1/4" = 1'-0"

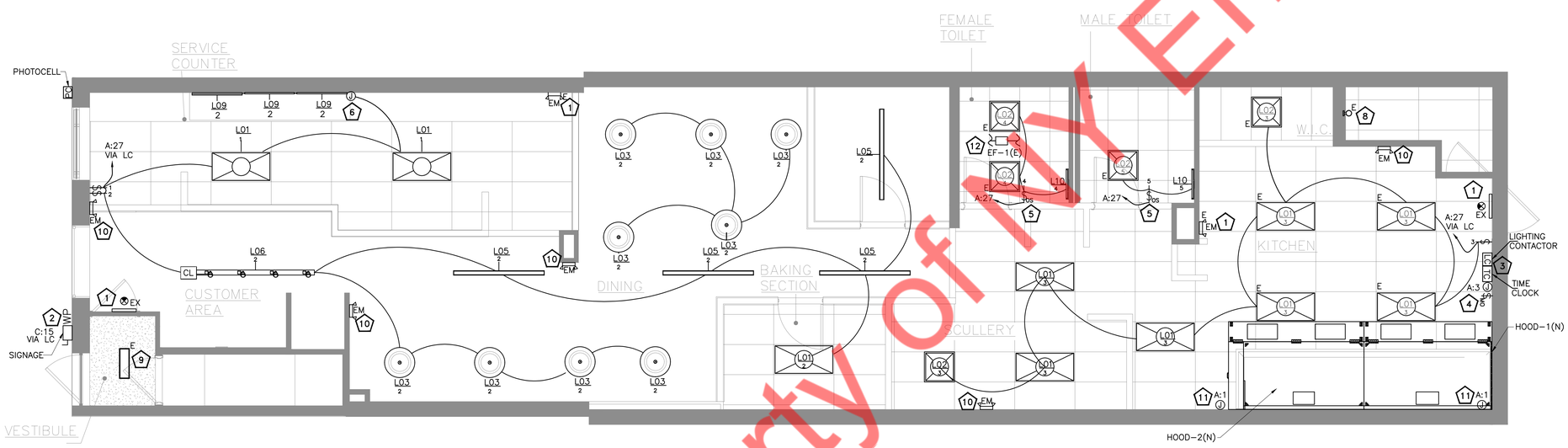


2 E1.0 ELECTRICAL LIGHTING PLAN - MAIN FLOOR
SCALE: 1/4" = 1'-0"

## LIGHTING PLAN GENERAL NOTES:

A. ELECTRICAL SWITCHES:
CONTROLS AND SWITCHES INTENDED TO BE USED BY THE OCCUPANT OF A ROOM OR AREA TO CONTROL LIGHTING AND RECEPTACLE OUTLETS, APPLIANCES OR COOLING, HEATING AND VENTILATING EQUIPMENT, SHALL COMPLY WITH CODE EXCEPT THE LOW REACH SHALL BE MEASURED TO THE BOTTOM OF THE OUTLET BOX AND THE HIGH REACH SHALL BE MEASURED TO THE TOP OF THE OUTLET BOX.

B. E.C. TO VERIFY REQUIREMENT OF THE NO. OF SWITCHES AND CONTROL PER PLAN AND PROVIDE ACCORDINGLY.

C. MINIMUM #12 AWG COPPER WIRING SHALL BE USED FOR THE LIGHTING CIRCUIT.

D. THE NEUTRAL AND GROUNDING ARE NOT SHOWN ON THE DRAWING. E.C. TO PROVIDE AS REQUIRED.

E. EMERGENCY LIGHT SHALL TURN ON DURING POWER FAILURE WHEREAS ALL EXIT SIGNS SHALL BE PERMANENTLY ON.

## LIGHTING FIXTURE SCHEDULE NOTES:

A. ALL (NEW) LIGHTING FIXTURES SHOWN ON THE LIGHTING FIXTURES SCHEDULE ARE SUBJECT TO THE ARCHITECTS APPROVAL. E.C. SHALL COORDINATE MAKE, MODEL, FINISHES, AND OTHER CRITICAL PARAMETERS WITH THE ARCHITECT BEFORE PURCHASING.

B. THE ADDITIONAL ACCESSORIES (VIZ. DRIVERS AND CURRENT LIMITERS) REQUIRED FOR THE PROPER WORKING OF THE LIGHTING FIXTURES MIGHT NOT BE PROVIDED BY THE VENDOR. E.C. SHALL PURCHASE IT SEPARATELY.

C. ALL LIGHTING FIXTURES ARE RATED FOR 120V UNLESS OTHERWISE NOTED.

D. ALL EMERGENCY LIGHTING FIXTURES AND EXIT SIGNS SHALL HAVE A MINIMUM OF 90 MINUTES OF BATTERY BACKUP OR AS REQUIRED BY AHJ.

E. WATTS PER FACE FOR EXIT SIGNS SHALL NOT EXCEED 5 WATTS.

F. ALL LIGHTING CONTROLS SHALL BE PER AHJ AND CODE COMPLIANCE.

## LIGHTING PLAN KEYED NOTES:

1. EXISTING EMERGENCY LIGHTING FIXTURE AND EXIT SIGN FIXTURES ALONG WITH THEIR CIRCUITS AND CONTROLS SHALL REMAIN. E.C. TO VERIFY OPERABLE CONDITIONS IN THE FIELD. REPLACE IF FOUND INOPERABLE.
2. DISCONNECT SWITCH PER NEC FOR CONNECTION TO BUILDING MOUNTED SIGNAGE. VERIFY EXACT LOCATION AND CONNECT TO SIGN PER MANUFACTURE'S INSTRUCTION.
3. TIME CLOCK AND LIGHTING CONTACTORS FOR LIGHTING CONTROL. COORDINATE EXACT LOCATION IN FIELD. REFER LIGHTING CONTACTOR TYPICAL DETAIL.
4. MANUAL OVERRIDE SWITCH. THE OVERRIDE SWITCH, WHEN INITIATED, SHALL PERMIT THE CONTROLLED LIGHTING TO REMAIN ON FOR NOT MORE THAN 2 HOURS.
5. WALL MOUNTED OCCUPANCY SENSOR WITH SWITCH. COORDINATE EXACT LOCATION AND MOUNTING IN THE FIELD.
6. E.C. SHALL COORDINATE WITH ARCHITECT/OWNER FOR EXACT LOCATION OF THE JUNCTION BOX IN THE FIELD. PROVIDE CIRCUIT AND CONTROL AS REQUIRED.
7. E.C. SHALL COORDINATE WITH ARCHITECT/OWNER FOR EXACT LOCATION OF PHOTOCELL IN THE FIELD.
8. EXISTING LIGHTING FIXTURES ALONG WITH THEIR CIRCUITS AND CONTROLS SHALL REMAIN. E.C. TO VERIFY CIRCUIT AND CONTROLS ELSE FEED THROUGH NEARBY CIRCUIT & VERIFY OPERABLE CONDITIONS IN THE FIELD. REPLACE IF FOUND INOPERABLE.
9. E.C. SHALL VERIFY AVAILABILITY OF LIGHT FIXTURE FOR VESTIBULE AREA COORDINATE WITH ARCHITECT/ OWNER PROVIDE CIRCUIT AND CONTROLS AS INDICATED.
10. NEW EMERGENCY LIGHTING FIXTURE TO BE CONNECTED IN LOOP WITH EXISTING EMERGENCY LIGHTING CIRCUIT AND CONTROL.
11. PROVIDE JUNCTION BOX, CIRCUIT, AND SWITCH FOR HOOD LIGHTING. COORDINATE THE EXACT LOCATION OF THE SWITCH IN THE FIELD.
12. EF-1(E) IN THE ROOM ALONG WITH THEIR CIRCUITS AND CONTROLS SHALL REMAIN AS EXISTING.

ELECTRICAL SYMBOLS

- $ LIGHT SWITCH
- LIGHT FIXTURE TAG / SWITCHING SYSTEM
- $ SWITCH NUMBER
- $MO MANUAL OVERRIDE SWITCH

ELECTRICAL ABBREVIATIONS

E = EXISTING LIGHT FIXTURE

GRAPHIC SCALE: 1/4" = 1'-0"
0 4' 8' 12' 16'

SHEET HISTORY SCHEDULE

| | | |
|---|---|---|
| | | |
| | | |
| | | |
| | | |
| | | |

ISSUE DATE: 10/16/2024 12:02:18 PM

RENOVATION BUILT -OUT

ZEITLIN'S DELICATESSEN

| | |
|---|---|
| DRAWN BY: | NYE |
| QAQC: | NYE |
| APPROVED BY: | NYE |
| PROJECT NUMBER: | 2432 |

ELECTRICAL LIGHTING PLAN

E1.0

Property of NY Engineers

## EQUIPMENT SCHEDULE

| NO. | QTY. | EQUIPMENT | MAKE | MODEL | VOLTAGE | PHASE | AMPS | CONNECTION | NOTES |
|---|---|---|---|---|---|---|---|---|---|
| E01 | 1 | WALK-IN-COOLER | NORLAKE | 7X8X7-4 | 120 | 1 | 0.92 | JB | - |
| E06 | 1 | EXHAUST HOOD | ECON-AIR | 5424 EX-2-PSP-F | | | | - | - |
| E07 | 1 | TILTING BRAISING PAN, 40 GALLON | Groen | BPM-40GC | 115 | 1 | 5 | - | 4 |
| E08 | 1 | 60" RANGE, 6 BURNERS, 24"GRIDDLE | BAKEMAX (TVI) | BAS36-24-2 | | | | GAS | - |
| E09 | 3 | REACH-IN REFRIGERATOR | NORPOLE | NP1R | 115 | 1 | 2.6 | - | 4 |
| E10 | 1 | UNDERCOUNTER: PIZZA PREP TABLES | INFRICO | IRT-MR67EN | 115 | 1 | - | NEMA 5-15P | - |
| E11 | 2 | GAS FLOOR FRYER | BAKEMAX (TVI) | BAKEGO40 | | | | GAS | - |
| E12 | 1 | UNDERCOUNTER:UNDERCOUNTER REFRIGERATOR | INFRICO | IUC-UC27S | 115 | 1 | - | NEMA 5-15P | 3 |
| E13 | 1 | CONVECTION OVEN, ELECTRIC | MOFFAT | E32D5 | 208 | 1 | 28 | - | 4 |
| E15 | 1 | REACH-IN SOLID SWING DOOR REFRIGERATOR WITH HYDROCARBON REFRIGERANT | TRUE | TS-43-HC | 115 | 1 | 5.4 | NEMA 5-15R | - |
| E16 | 1 | ICE MAKER, CUBE STYLE | HOSHIZAKI AMERICA, INC. | EI-KM520M | 115 | 1 | 8.45 | - | 4 |
| E17 | 1 | DISHWASHER, UNDERCOUNTER | HOBART | CUH-1 | 208 | 1 | 24.2 | - | 4 |
| E22 | 1 | DOUGH SHEETER | BAKEMAX (TVI) | BMCRS01 | 110 | 1 | 7.8 | NEMA 5-15P | |
| E23 | 1 | OVEN, RACK | MIWE AMERICA | CO 3.1408 | 230 | 3 | 54.37 | - | 1 |
| E24 | 1 | DOUGH MIXER | FIERO | IM44MUS | 220 | 1 | 11.5 | NEMA 6-15P | 1 |
| E27 | 2 | P.O.S. TABLET | TBD | TBD | | | | | - |
| E30 | 1 | RAPID COOK OVEN | PRATICA | FIT EXPRESS | 208 | 1 | 12.98 | NEMA 6-15P | - |
| E31 | 1 | Oven, Deck, Countertop, Electric | Pizza Master | PM 451ED | 208 | 3 | 15 | - | 4 |
| E33 | 1 | SANDWICH/SALAD PREP REFRIGERATOR | TRUE | TSSU-60-08-HC | 115 | 1 | 6.5 | NEMA 5-15P | - |
| E36 | 1 | COFFEE GRINDER | F&O IMPORTS | Q10 EVO | | | | | - |
| E38 | 1 | ESPRESSO CAPPUCCINO MACHINE | RANCILIO GROUP | CLASSE 5 USB 2GR | 208 | 1 | 20.67 | NEMA 6-30R | - |
| E39 | 1 | BACKBAR COOLER | INFRICO | IMD-ERV60IIGD | 115 | 1 | 5.2 | NEMA 5-15P | - |
| E40 | 1 | COFFEE BREWER | FETCO | CBS-1221-PLUS | 208 | 1 | 12.9 | NEMA 5-15P | - |
| E45 | 1 | REACH-IN REFRIGERATOR | NORPOLE | NP1R-G | 115 | 1 | 2.6 | NEMA 5-15P | - |
| E48 | 1 | 60Qt. Mixer | Hobart | HL600-1 | 208 | 3 | 10 | - | 4 |
| E50.1 | 1 | CHEST FREEZER | INSIGNIA | TBD | - | - | - | - | 4 |
| E50.2 | 1 | CHEST FREEZER | INSIGNIA | NS-CZ10WH6 | 115 | 1 | 1.4 | - | 2,4 |
| E52 | 1 | ICE CREAM DIPPING CABINET | EXCELLENCE COMMERCIAL PRODUCTS | HFF-8HC | 115 | 1 | 6.7 | - | 4 |

NOTES:

1. THE CONTRACTOR SHALL EITHER PROVIDE EQUIVALENT EQUIPMENT AT SERVICE VOLTAGE (IN COORDINATION WITH OWNER/ARCHITECT) OR PROVIDE AN ADAPTER/TRANSFORMER FOR THAT EQUIPMENT.
2. USE A RECEPTACLE THAT ACCEPTS THE GROUNDING PRONG.
3. COORDINATE EXACT MAKE/MODEL NUMBER WITH THE OWNER/ARCHITECT.
4. COORDINATE THE EXACT CONNECTION TYPE WITH THE VENDOR BEFORE BID.

## POWER PLAN KEYED NOTES: #

1. E.C SHALL COORDINATE THE POWER REQUIREMENT WITH MANUFACTURER FOR ADDITIONAL CONVENIENCE OUTLET AT STANDARD HEIGHT AND VERIFY EXACT LOCATION WITH ARCHITECT.
2. PROVIDE CEILING MOUNTED RECEPTACLE FOR SHOW WINDOW. VERIFY EXACT LOCATION WITH ARCHITECT.
3. E.C SHALL COORDINATE WITH THE ARCHITECT/OWNER FOR THE EXACT LOCATION OF THE PANEL IN THE FIELD. ALSO ENSURE CLEAR WORKING AND DEDICATED SPACE HAVE BEEN PROVIDED AS PER CODE.
4. JUNCTION BOX FOR HAND DRYER. PROVIDE LOCKOUT BREAKER IN PANEL.
5. E.C SHALL COORDINATE WITH THE PLUMBING CONTRACTOR FOR EXACT LOCATION AND ELECTRICAL CONNECTION REQUIREMENT OF THE UNIT IN THE FIELD. PROVIDE CIRCUIT AND CONTROL AS REQUIRED.
6. E.C. SHALL COORDINATE WITH EQUIPMENT VENDOR/ARCHITECT FOR EXACT POWER REQUIREMENT AND CONNECTION TYPE REQUIRED FOR EQUIPMENT IN THE FIELD. PROVIDE ACCORDINGLY.
7. E.C. TO COORDINATE FOR EXACT LOCATION, POWER REQUIREMENT AND CONNECTION TYPE WITH WALK IN BOX MANUFACTURER AND MAKE PROVISION ACCORDINGLY.
8. E.C. SHALL COORDINATE WITH THE MECHANICAL CONTRACTOR FOR THE EXACT LOCATION AND ELECTRICAL CONNECTION REQUIREMENT OF THE HVAC UNIT IN THE FIELD. PROVIDE CIRCUIT AND CONTROLS AS REQUIRED.
9. E.C. SHALL COORDINATE WITH ARCHITECT/OWNER FOR MOUNTING LOCATION OF RECEPTACLE IN THE FIELD & PROVIDE ACCORDINGLY.

## ROOF POWER PLAN KEY NOTES: #

1. E.C. SHALL COORDINATE WITH THE MECHANICAL CONTRACTOR FOR THE EXACT LOCATION AND ELECTRICAL CONNECTION REQUIREMENT OF THE HVAC UNIT IN THE FIELD. PROVIDE CIRCUIT AND CONTROLS AS REQUIRED.
2. EXISTING (E) MECHANICAL UNITS TO REMAIN. E.C. TO VERIFY THE OPERABLE CONDITION OF THE ELECTRICAL CIRCUIT AND CONTROLS IN THE FIELD. REROUTE THE WIRING TO THE INDICATED CIRCUIT. BASE BID ACCORDINGLY.

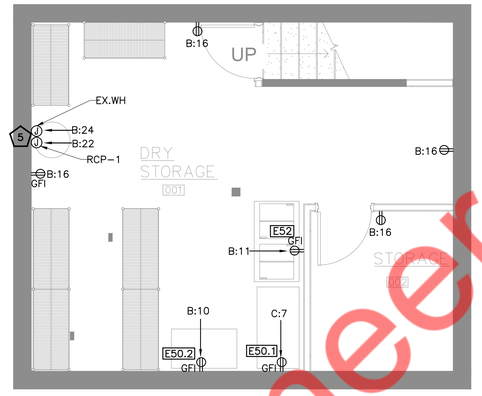


1 E1.0 ELECTRICAL POWER PLAN - BASEMENT
SCALE: 1/4" = 1'-0"

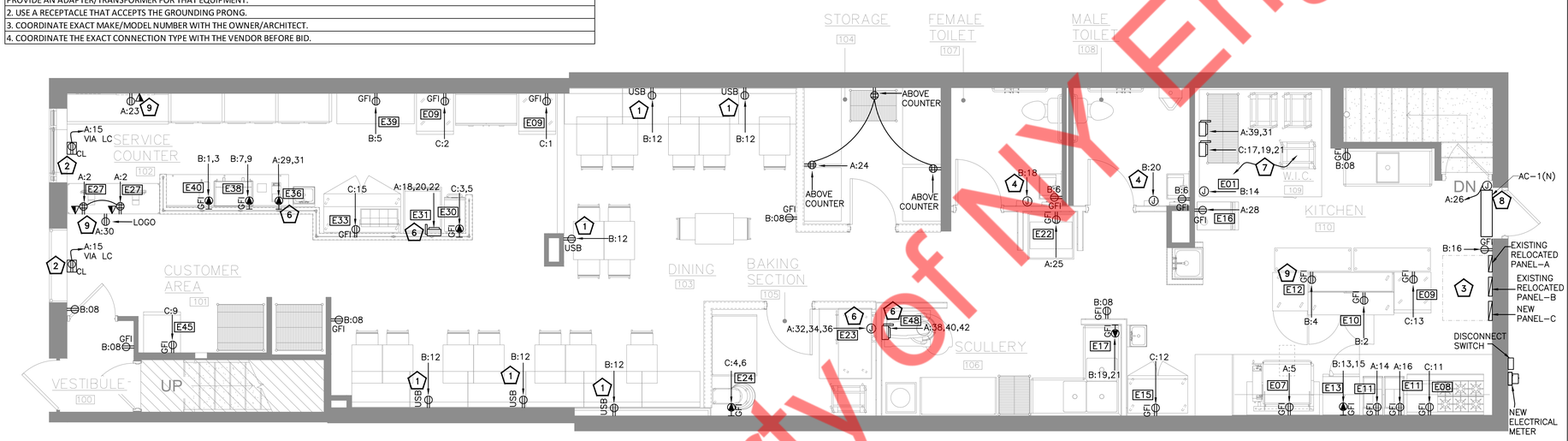


2 E1.0 ELECTRICAL POWER PLAN - MAIN FLOOR
SCALE: 1/4" = 1'-0"

3 E1.0 ELECTRICAL ROOF POWER PLAN
SCALE: 1/4" = 1'-0"

## POWER PLAN GENERAL NOTES:

A. EXACT LOCATION OF MECHANICAL, PLUMBING, KITCHEN, FURNITURE SYSTEMS, OWNER FURNISHED EQUIPMENT ETC. THAT REQUIRE ELECTRICAL CONNECTIONS ARE SHOWN ON THE MECHANICAL, PLUMBING, AND/OR ARCHITECTURAL DRAWINGS. E.C. TO COORDINATE EXACT LOCATIONS WITH RESPECTIVE CONTRACTORS AND/OR VENDORS PRIOR TO ANY ROUGH-INS.

B. REVIEW AND COORDINATE WITH ALL TRADES CONTRACT DOCUMENTS TO DETERMINE SPECIFIC MOUNTING LOCATIONS FOR EQUIPMENT WITH ELECTRICAL CONNECTIONS. COORDINATE EXACT MOUNTING LOCATIONS WITH THE SPECIFIC TRADE AND ARCHITECT.

C. MINIMUM CONDUCTOR SIZE FOR 120V BRANCH CIRCUITS SHALL BE 12-AWG. FOR 120V BRANCH CIRCUITS WITH HOME-RUN OVER 100 LINEAR FEET, A MINIMUM WIRE SIZE OF 10-AWG SHALL BE PROVIDED FROM FIRST JUNCTION/OUTLET BOX TO BRANCH CIRCUIT PANEL BOARD. FOR 120V BRANCH CIRCUITS WITH HOME RUN OVER 150 LINEAR FEET, A MINIMUM OF 8-AWG SHALL BE PROVIDED FROM FIRST JUNCTION/OUTLET BOX TO BRANCH CIRCUIT PANEL BOARD.

D. ALL WIRING SHALL BE IDENTIFIED BY PANEL BOARD AND CIRCUIT NUMBERS IN ALL CABINETS, JUNCTION BOXES, WIRING TROUGHS, ENCLOSURES, SPLICE OR TERMINATION POINTS ETC.

E. ALL 120V, 15A AND 20A RECEPTACLES IN KITCHEN AREA SHALL BE "GFCI" IN ACCORDANCE WITH NEC ARTICLE 210.8(B). GFI RECEPTACLE TO BE MOUNTED AT ACCESSIBLE LOCATION. ELSE PROVIDE GFI RATED BREAKER AT PANEL FOR KITCHEN EQUIPMENT.

F. ELECTRICAL CONDUCTORS FOR FEEDERS AND BRANCH CIRCUITS COMBINED SHALL BE SIZED FOR A MAXIMUM OF 5 PERCENT VOLTAGE DROP.

G. COORDINATE EXACT LOCATION AND ELECTRICAL CONNECTION REQUIREMENTS OF THE MOTORIZED DAMPERS AND THERMOSTATS IN THE FIELD. PROVIDE WIRING AS REQUIRED.

H. REUSE EXISTING OR PROVIDE NEW DATA/TELEPHONE BOARD. COORDINATE WITH THE ARCHITECT/VENDOR.

## KITCHEN EQUIPMENT GENERAL NOTES

A. THIS SCHEDULE SHOWS ALL CIRCUITING INFORMATION FOR KITCHEN / FOOD SERVICE EQUIPMENT.

B. NEMA X-XX DESIGNATES NEMA PLUG TYPE AND AMPERAGE.

C. VERIFY ALL INSTALLATION REQUIREMENTS WITH FOOD SERVICE CONSULTANT AND EQUIPMENT MANUFACTURER PRIOR TO ROUGH-IN.

D. VERIFY ALL MCA AND MOCP REQUIREMENTS WITH SUBMITTED AND APPROVED EQUIPMENT PRIOR TO ELECTRICAL ROUGH-IN.

E. VERIFY NEMA RECEPTACLE CONFIGURATIONS WITH EQUIPMENT VENDOR PRIOR TO ELECTRICAL ROUGH-IN.

F. CONTRACTOR IS RESPONSIBLE FOR FURNISHING AND INSTALLING ALL CONDUIT, WIRE, SUPPORT SYSTEM, DISCONNECTS, AND OUTLETS TO ALLOW FOR A COMPLETE CODE COMPLIANT KITCHEN INSTALLATION.

G. ALL ELECTRICAL EQUIPMENT LOCATED ON WALLS OF PRODUCTION KITCHEN AREAS SHALL BE A MINIMUM OF 48" AFF UNLESS NOTED OTHERWISE. ALL ELECTRICAL EQUIPMENT LOCATED ABOVE COUNTERS OF KITCHEN AREAS SHALL BE 6" ABOVE COUNTER UNLESS NOTED OTHERWISE. ALL ELECTRICAL EQUIPMENT LOCATED BELOW COUNTERS AND WITHIN CASEWORK OF KITCHEN AREAS SHALL BE 6" BELOW THE TOP OF COUNTERS UNLESS NOTED OTHERWISE.

H. ALL RECEPTACLES IN KITCHEN AREA SHALL BE GFCI PROTECTED. E.C. SHALL PROVIDE AND INSTALL GFCI CIRCUIT BREAKERS FOR ALL CIRCUITS FEEDING KITCHEN EQUIPMENT REQUIRING GFCI PROTECTION THAT ARE INACCESSIBLE, BEFORE OR AFTER APPLIANCE HAS BEEN INSTALLED, IF RECEPTACLE DOESNT PROVIDE GFCI PROTECTION. NEC 210.8 AND 422.5(A).

I. LOCATIONS OF DISCONNECTS FOR EACH PIECE OF EQUIPMENT MAY NOT BE SHOWN ON PLANS. IF DISCONNECT FOR EQUIPMENT IS NOT SHOWN, CONTRACTOR TO FIELD COORDINATE LOCATION IN ACCORDANCE WITH CODE.

J. CONTRACTOR SHALL LIMIT THE AMOUNT OF EXPOSED CONDUIT. ANY EXPOSED CONDUIT SHALL BE LIQUID TIGHT FLEXIBLE METAL CONDUIT OR RIGID GALVANIZED STEEL CONDUIT.

K. COORDINATE EXACT LOCATION OF ALL REMOTE CONDENSING UNITS WITH HVAC AND FOOD SERVICE DRAWINGS.

L. FUSED DISCONNECTS SHALL HAVE FUSES SIZED AS LISTED ON EQUIPMENT NAMEPLATE, OTHERWISE MATCH UPSTREAM OVERCURRENT DEVICE IF NO MAXIMUM OVER CURRENT SIZE LISTED ON EQUIPMENT, UNLESS NOTED OTHERWISE.

## ROOF POWER PLAN GENERAL NOTES:

A. ALL THE ELECTRICAL ELEMENT VIZ. CONDUITS, WIRING, AND DISCONNECT SWITCHES SHALL BE RATED FOR THE EXTERIOR USE.

B. THE DISCONNECT SWITCHES FOR THE BRANCH CIRCUIT SHOWN ON THE PLAN SHALL BE RATED EQUAL TO OR HIGHER THAN THE BREAKER RATING. REFER BREAKER RATING IN THE PANEL SCHEDULE AND PROVIDE DISCONNECT AS NEEDED.

C. GFI MARKED ON THE PLAN INDICATES THAT THE CIRCUIT SHALL BE GFI PROTECTED. E.C. SHALL PROVIDE A GFI BREAKER IN THE PANEL FOR THE INDICATED CIRCUIT IF EITHER THE RECEPTACLE IS NOT AVAILABLE OR NOT ACCESSIBLE.

D. A 125-VOLT, SINGLE-PHASE, 15- OR 20-AMPERE-RATED RECEPTACLE OUTLET SHALL BE INSTALLED AT AN ACCESSIBLE LOCATION WITHIN 7.5 M (25 FT) OF THE EQUIPMENT AS SPECIFIED IN 210.63(A) AND (B) AS PER NEC 210.63.

GRAPHIC SCALE: 1/4" = 1'-0"
0 4' 8' 12' 16'

SHEET HISTORY SCHEDULE

| | | |
|---|---|---|
| | | |
| | | |
| | | |
| | | |
| | | |

ISSUE DATE: 10/16/2024 12:02:18 PM

RENOVATION BUILT -OUT

ZEITLIN'S DELICATESSEN

| | |
|---|---|
| DRAWN BY: | NYE |
| QAQC: | NYE |
| APPROVED BY: | NYE |
| PROJECT NUMBER: | 2432 |

ELECTRICAL POWER PLAN AND ROOF POWER PLAN

E2.0

Property of NY Engineers

DIAGRAM BELOW INDICATES THE GENERAL ARRANGEMENT OF THE CONTACTOR PANEL.
SEE ELECTRICAL LIGHTING PLAN FOR CIRCUIT AND CONTROL DETAILS.
CONTRACTOR SHALL SELECT THE QUANTITY OF THE CONTACTORS AS REQUIRED.

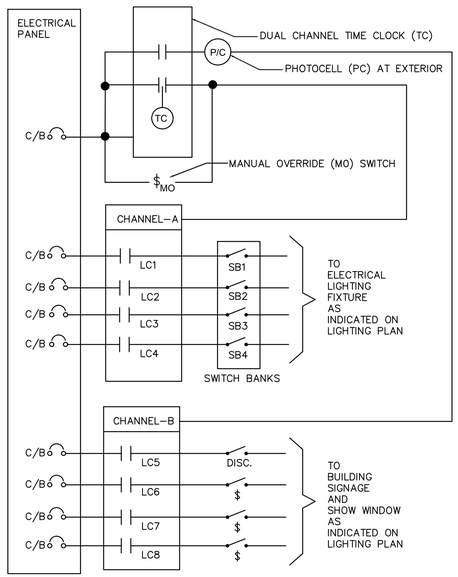


1 E3.0 LIGHTING CONTACTOR DETAIL (TYPICAL)
N.T.S

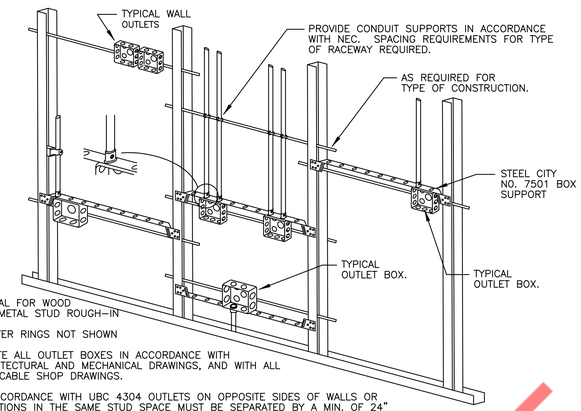


NOTES:

1. TYPICAL FOR WOOD AND METAL STUD ROUGH-IN
2. PLASTER RINGS NOT SHOWN
3. LOCATE ALL OUTLET BOXES IN ACCORDANCE WITH ARCHITECTURAL AND MECHANICAL DRAWINGS, AND WITH ALL APPLICABLE SHOP DRAWINGS.
4. IN ACCORDANCE WITH UBC 4304 OUTLETS ON OPPOSITE SIDES OF WALLS OR PARTITIONS IN THE SAME STUD SPACE MUST BE SEPARATED BY A MIN. OF 24" HORIZONTAL DISTANCE.

2 E3.0 DETAIL TYPICAL ROUGH-IN REQUIREMENTS
N.T.S

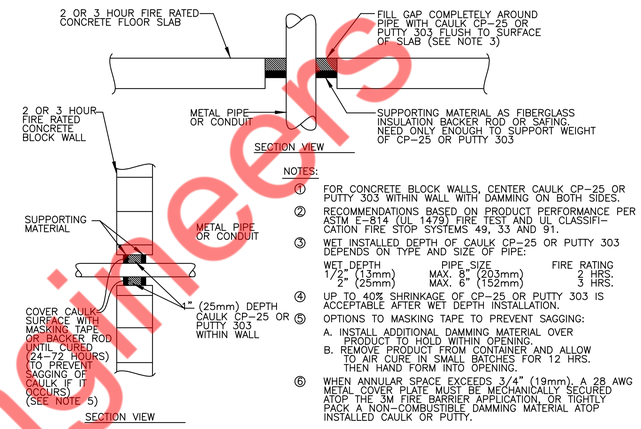


NOTES:

1. FOR CONCRETE BLOCK WALLS, CENTER CAULK CP-25 OR PUTTY 303 WITHIN WALL WITH DAMMING ON BOTH SIDES.
2. RECOMMENDATIONS BASED ON PRODUCT PERFORMANCE PER ASTM E-814 (UL 1479) FIRE TEST AND UL CLASSIFICATION FIRE STOP SYSTEMS 49, 33 AND 91.
3. WET INSTALLED DEPTH OF CAULK CP-25 OR PUTTY 303 DEPENDS ON TYPE AND SIZE OF PIPE:

| WET DEPTH | PIPE SIZE | FIRE RATING |
|---|---|---|
| 1/2" (13mm) | MAX. 8" (203mm) | 2 HRS. |
| 2" (25mm) | MAX. 6" (152mm) | 3 HRS. |

4. UP TO 40% SHRINKAGE OF CP-25 OR PUTTY 303 IS ACCEPTABLE AFTER WET DEPTH INSTALLATION.
5. OPTIONS TO MASKING TAPE TO PREVENT SAGGING:
   A. INSTALL ADDITIONAL DAMMING MATERIAL OVER PRODUCT TO HOLD WITHIN OPENING.
   B. REMOVE PRODUCT FROM CONTAINER AND ALLOW TO AIR CURE IN SMALL BATCHES FOR 12 HRS. THEN HAND FORM INTO OPENING.
6. WHEN ANNULAR SPACE EXCEEDS 3/4" (19mm), A 28 AWG METAL COVER PLATE MUST BE MECHANICALLY SECURED ATOP THE 3M FIRE BARRIER APPLICATION, OR TIGHTLY PACK A NON-COMBUSTIBLE DAMMING MATERIAL ATOP INSTALLED CAULK OR PUTTY.

3 E3.0 FIRE STOP DETAIL
N.T.S

AUTOMATIC MODE OPERATION:

1. WHEN SENSOR ACTIVATES LOAD TURNS ON.
2. LOAD TURNS OFF, WHEN SENSOR TIMES OUT.
3. IF DAYLIGHT SENSOR IS ENABLED, AND LIGHT LEVEL IS ABOVE PRESET SETPOINT, LOAD WILL NOT TURN ON.

SENSOR TYPES INCLUDE:

OAC-DT-2000-MV,
OAC-U-2000-MV,
OAC-P-0500-MV, OAC-P-1500-MV

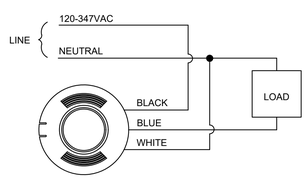


4 E3.0 OCCUPANCY-SINGLE RELAY WIRING DIAGRAM-LINE VOLTAGE CEILING SENSOR
N.T.S

MANUAL MODE OPERATION:

1. PUSHBUTTON PRESS IS REQUIRED TO TURN LOAD ON.
2. LOAD TURNS OFF WHEN SENSOR TIMES OUT OR BY PRESSING PUSH BUTTON.
3. IF DAYLIGHT SENSOR IS ENABLED AND LIGHT LEVEL IS ABOVE SETPOINT, LOAD WILL NOT TURN ON.

AUTOMATIC MODE OPERATION:

1. WHEN SENSOR ACTIVATES LOAD TURNS ON.
2. PUSHBUTTON CAN BE USED TO TURN LOAD ON OR OFF. IF PUSHBUTTON IS USED TO TURN LOAD OFF, SENSOR MUST TIME OUT FIRST, BEFORE LOAD CAN TURN BACK ON AUTOMATICALLY.
3. IF DAYLIGHT SENSOR IS ENABLED AND LIGHT LEVEL IS ABOVE SETPOINT, LOAD WILL NOT TURN ON.

SENSOR TYPES INCLUDE:

ONW-D-1001-MV-N

1 PROVIDE SENSING CONDUCTOR TAPPED AHEAD OF ANY SWITCHES WHERE SWITCH SERVES EMERGENCY FIXTURES.

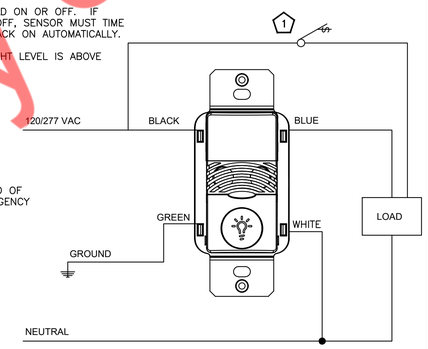


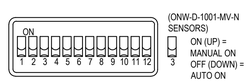


(ONW-D-1001-MV-N SENSORS)
ON (UP) = MANUAL ON
OFF (DOWN) = AUTO ON

5 E3.0 CONNECTION) OCCUPANCY/VACANCY-SINGLE LEVEL WIRING DIAGRAM-LOW VOLTAGE WALL SWITCH SENSOR(NEUTRAL
NTS

Property of NY Engineers

SHEET HISTORY SCHEDULE

| | | |
|---|---|---|
| | | |
| | | |
| | | |
| | | |
| | | |

ISSUE DATE: 10/16/2024 12:02:18 PM

RENOVATION BUILT -OUT

ZEITLIN'S DELICATESSEN

| | |
|---|---|
| DRAWN BY: | NYE |
| QAQC: | NYE |
| APPROVED BY: | NYE |
| PROJECT NUMBER: | 2432 |

ELECTRICAL DETAILS

E3.0

# ELECTRICAL PANEL SCHEDULE

| PANEL: | A | RELOCATED | - | MOUNTING: | SURFACE |
|---|---|---|---|---|---|

| | | | | | | | | | | | | |
|---|---|---|---|---|---|---|---|---|---|---|---|---|
| 208Y/120 | VOLTS | PHASE | 3 | | - | - | | | DEMAND LOAD | 68.13 | | PANEL LOCATION: KITCHEN (BOH) |
| 200A | MCB | WIRE | 4 | | - | - | | | DEMAND CURRENT | 189.34 | | FED FROM: PANEL-C |

NOTE:

| CKT NO. | TRIP AMPS | DESCRIPTION OF LOAD | LOAD TYPE | LOAD (KVA) | MINIMUM BRANCH CIRCUIT | PER PHASE (KVA) A | B | C | MINIMUM BRANCH CIRCUIT | LOAD (KVA) | LOAD TYPE | DESCRIPTION OF LOAD | TRIP AMPS | CKT NO. |
|---|---|---|---|---|---|---|---|---|---|---|---|---|---|---|
| 1 | 20* | HOOD LIGHTING | L | 0.50 | 2#12, #12G, 3/4"C | 0.86 | | | 2#12, #12G, 3/4"C | 0.36 | O | E27_POS | 20* | 2 |
| 3 | 20 | TIME CLOCK | L | 1.00 | 2#12, #12G, 3/4"C | | 2.20 | | 2#12, #12G, 3/4"C | 1.20 | L | EXTERIOR SIGNAGE | 20 | 4 |
| 5 | 20** | E07_TILTING BRAISING PAN, 40 GALLON | E | 0.60 | 2#12 + 1#12G, 3/4"C | | | 10.53 | EXISTING | 9.93 | O | TO PANEL-B | 125/2P | 6 |
| 7 | | SHUNT TRIP | | | | 9.93 | | | | 9.93 | O | | | 8 |
| 9 | 60/3P* | RTU-1 (E) | H | 5.80 | 3#6, #10G, 3/4"C | | 7.78 | | 2#10, #10G, 3/4"C | 1.98 | H | ACCU-1(N) & AHU-1(N) | 30/2P | 10 |
| 11 | | | H | 5.80 | | | | 7.78 | | 1.98 | H | | | 12 |
| 13 | | | H | 5.80 | | 5.98 | | | 2#12, #12G, 3/4"C | 0.18 | E | E11_GAS FLOOR FRYER | 20 | 14 |
| 15 | 20* | SHOW WINDOW RECEPTACLE | L | 1.80 | 2#12, #12G, 3/4"C | | 1.98 | | 2#12, #12G, 3/4"C | 0.18 | E | E11_GAS FLOOR FRYER | 20 | 16 |
| 17 | 15/3P | MAU-1(N) | H | 0.92 | 3#12, #12G, 3/4"C | | | 2.72 | 3#12 + 1#12G, 3/4"C | 1.80 | E | E31_OVEN, DECK COUNTERTOP ELECTRIC | 20/3P | 18 |
| 19 | | | H | 0.92 | | 2.72 | | | | 1.80 | E | | | 20 |
| 21 | | | H | 0.92 | | | 2.72 | | | 1.80 | E | | | 22 |
| 23 | 15 | MENU BOARD RECEPTACLE | R | 0.18 | 2#12, #12G, 3/4"C | | | 1.26 | 2#12, #12G, 3/4"C | 1.08 | R | STORAGE OUTLETS | 15 | 24 |
| 25 | 20 | E22_DOUGH SHEETER | E | 0.94 | 2#12, #12G, 3/4"C | 1.23 | | | 2#12, #12G, 3/4"C | 0.29 | H | AC-1(N) | 20 | 26 |
| 27 | 20 | INTERIOR LIGHTING | L | 1.18 | 2#12, #12G, 3/4"C | | 2.19 | | 2#12, #12G, 3/4"C | 1.01 | E | E16_ICE MAKER, CUBE STYLE | 20* | 28 |
| 29 | 15/2P* | E36_COFFEE GRINDER | E | 0.30 | 2#12, #12G, 3/4"C | | | 1.30 | 2#12, #12G, 3/4"C | 1.00 | R | LOGO SIGN | 20 | 30 |
| 31 | | | E | 0.30 | | 0.30 | | | | | | SPARE | 80/3P | 32 |
| 33 | 20/3P* | KEF-1(N) | H | 1.56 | 3#12 + 1#12G, 3/4"C | | 1.56 | | | | | | | 34 |
| 35 | | | H | 1.56 | | | | 1.56 | | | | | | 36 |
| 37 | | | H | 1.56 | | 2.76 | | | 3#12 + 1#12G, 3/4"C | 1.20 | E | E48_60Qt. Mixer | 20/3P | 38 |
| 39 | 20/2P* | WALK-IN COOLER EVAPORATOR | E | 1.02 | 2#12, #12G, 3/4"C | | 2.22 | | | 1.20 | E | | | 40 |
| 41 | | | E | 1.02 | | | | 2.22 | | 1.20 | E | | | 42 |
| | | | | | | 23.78 | 20.65 | 27.37 | | | | | | |

| PANEL: | B | RELOCATED | | MOUNTING: | SURFACE |
|---|---|---|---|---|---|

| | | | | | | | | | | | | |
|---|---|---|---|---|---|---|---|---|---|---|---|---|
| 208/120 | VOLTS | PHASE | 1 | | - | - | | | DEMAND LOAD | 19.86 | | PANEL LOCATION: KITCHEN (BOH) |
| 125A | MLO | WIRE | 3 | | - | - | | | DEMAND CURRENT | 95.50 | | FED FROM: PANEL A |

NOTE:

| CKT NO. | TRIP AMPS | DESCRIPTION OF LOAD | LOAD TYPE | LOAD (KVA) | MINIMUM BRANCH CIRCUIT | PER PHASE (KVA) A | B | MINIMUM BRANCH CIRCUIT | LOAD (KVA) | LOAD TYPE | DESCRIPTION OF LOAD | TRIP AMPS | CKT NO. |
|---|---|---|---|---|---|---|---|---|---|---|---|---|---|
| 1 | 20/2P | E40_COFFEE BREWER | E | 1.34 | 2#12 + 1#12G, 3/4"C | 2.78 | | 2#12, #12G, 3/4"C | 1.44 | E | E10_UNDERCOUNTER: PIZZA PREP TABLES | 20* | 2 |
| 3 | | | E | 1.34 | | | 2.78 | 2#12, #12G, 3/4"C | 1.44 | E | E12_UNDERCOUNTER:UNDERCOUNTER REFRIGERATOR | 20* | 4 |
| 5 | 20* | E39_BACKBAR COOLER | E | 0.62 | 2#12, #12G, 3/4"C | 0.98 | | 2#12, #12G, 3/4"C | 0.36 | R | RESTROOM RECPTACLES | 20 | 6 |
| 7 | 30/2P* | E38_ESPRESSO CAPPUCCINO MACHINE | E | 2.15 | 2#10 + 1#10G, 3/4"C | | 3.23 | 2#12, #12G, 3/4"C | 1.08 | R | GENERAL RECEPTACLES | 20* | 8 |
| 9 | | | E | 2.15 | | 2.32 | | 2#12, #12G, 3/4"C | 0.17 | E | E50.2_CHEST FREEZER | 20 | 10 |
| 11 | 20 | E52_ICE CREAM DIPPING CABINET | E | 0.17 | 2#12, #12G, 3/4"C | | 1.25 | 2#12, #12G, 3/4"C | 1.08 | R | DINING- GENERAL RECEPTACLE | 20 | 12 |
| 13 | 20/2P** | E13_CONVECTION OVEN, ELECTRIC | E | 2.91 | 2#12 + 1#12G, 3/4"C | 3.02 | | 2#12, #12G, 3/4"C | 0.11 | E | E01_WALK-IN-COOLER | 20 | 14 |
| 15 | | | E | 2.91 | | | 3.81 | 2#12, #12G, 3/4"C | 0.90 | R | GENERAL RECEPTACLES | 15 | 16 |
| 17 | | SHUNT TRIP | | | | 1.00 | | 2#12, #12G, 3/4"C | 1.00 | O | HAND DRYER | 20 | 18 |
| 19 | 30/2P | E17_DISHWASHER, UNDERCOUNTER | E | 2.52 | 2#10 + 1#10G, 3/4"C | | 3.52 | 2#12, #12G, 3/4"C | 1.00 | O | HAND DRYER | 20 | 20 |
| 21 | | | E | 2.52 | | 2.62 | | 2#12, #12G, 3/4"C | 0.10 | O | RCP-1 (RECIRCUILATION PUMP) | 20* | 22 |
| 23 | 20 | SPARE | | | | | 0.18 | 2#12, #12G, 3/4"C | 0.18 | O | EX. WH (WATER HEATER) | 20 | 24 |
| | | | | | | 12.72 | 14.77 | | | | | | |

| PANEL: | C | NEW | - | MOUNTING: | SURFACE |
|---|---|---|---|---|---|

| | | | | | | | | | | | | |
|---|---|---|---|---|---|---|---|---|---|---|---|---|
| 208Y/120 | VOLTS | PHASE | 3 | | - | - | | | DEMAND LOAD | 97.34 | | PANEL LOCATION: KITCHEN (BOH) |
| 400A | MCB | WIRE | 4 | | - | - | | | DEMAND CURRENT | 270.52 | | FED FROM: ELECTRICAL METER |

NOTE:

| CKT NO. | TRIP AMPS | DESCRIPTION OF LOAD | LOAD TYPE | LOAD (KVA) | MINIMUM BRANCH CIRCUIT | PER PHASE (KVA) A | B | C | MINIMUM BRANCH CIRCUIT | LOAD (KVA) | LOAD TYPE | DESCRIPTION OF LOAD | TRIP AMPS | CKT NO. |
|---|---|---|---|---|---|---|---|---|---|---|---|---|---|---|
| 1 | 20 | E09_REACH-IN REFRIGERATOR | E | 0.31 | 2#12, #12G, 3/4"C | 0.62 | | | 2#12, #12G, 3/4"C | 0.31 | E | E09_REACH-IN REFRIGERATOR | 20 | 2 |
| 3 | 20/2P | E30_RAPID COOK OVEN | E | 1.35 | 2#12 + 1#12G, 3/4"C | | 2.55 | | 2#12 + 1#12G, 3/4"C | 1.20 | E | E24_DOUGH MIXER | 20/2P | 4 |
| 5 | | | E | 1.35 | | | | 2.55 | | 1.20 | E | | | 6 |
| 7 | 20 | E50.1_CHEST FREEZER | E | 0.17 | | 0.17 | | | | | | SPARE | 20 | 8 |
| 9 | 20 | E45_REACH-IN REFRIGERATOR | E | 0.31 | 2#12, #12G, 3/4"C | | 0.31 | | | | | SPARE | 20 | 10 |
| 11 | 20 | E08_RANGE | E | 0.18 | 2#12, #12G, 3/4"C | | | 0.83 | 2#12, #12G, 3/4"C | 0.65 | E | E15_REACH-IN SOLID SWING DOOR REFRIGERATOR WITH HYDROCARBON REFRIGERANT | 20 | 12 |
| 13 | 20 | E09_REACH-IN REFRIGERATOR | E | 0.31 | 2#12, #12G, 3/4"C | 0.67 | | | 2#12, #12G, 3/4"C | 0.36 | R | ROOF RECEPTACLES | 20 | 14 |
| 15 | 20 | E33_SANDWICH/SALAD PREP REFRIGERATOR | E | 0.78 | 2#12, #12G, 3/4"C | | 8.31 | | 3#4 + 1#8G, 1"C | 7.53 | E | E23_OVEN, RACK | 80/3P | 16 |
| 17 | 50/3P | WALK-IN COOER CONDENSOR | E | 4.56 | 3#8, #10G, 3/4"C | | | 12.09 | | 7.53 | E | | | 18 |
| 19 | | | E | 4.56 | | 12.09 | | | | 7.53 | E | | | 20 |
| 21 | | | E | 4.56 | | | 4.56 | | | | | SPACE | | 22 |
| 23 | | SPACE | | | | | | 0.00 | | | | SPACE | | 24 |
| 25 | | SPACE | | | | 0.00 | | | | | | SPACE | | 26 |
| 27 | | SPACE | | | | | 0.00 | | | | | SPACE | | 28 |
| 29 | | SPACE | | | | | | 0.00 | | | | SPACE | | 30 |
| 31 | | SPACE | | | | 0.00 | | | | | | SPACE | | 32 |
| 33 | | SPACE | | | | | 0.00 | | | | | SPACE | | 34 |
| 35 | | SPACE | | | | | | 0.00 | | | | SPACE | | 36 |
| 37 | | SPACE | | | | 22.71 | | | 4#3/0 + 1#6G, 2"C | 22.71 | O | TO PANEL-A | 200/3P | 38 |
| 39 | | SPACE | | | | | 22.71 | | | 22.71 | O | | | 40 |
| 41 | | SPACE | | | | | | 22.71 | | 22.71 | O | | | 42 |
| | | | | | | 36.26 | 38.44 | 38.18 | | | | | | |

PANEL SCHEDULE ABBREVIATIONS:

L=LIGHTING
R=RECEPTACLE
H=HVAC
M=MOTOR
O=OTHER

* = NEW BREAKER IN EXISTING PANEL
** = SHUNT TRIP

## ELECTRICAL SERVICE LOAD CALCULATION

| LOAD DESCRIPTION | PANEL A | PANEL B | PANEL C | TOTAL | | D.F. | TOTAL |
|---|---|---|---|---|---|---|---|
| LIGHTING LOAD | 5.68 | 0.00 | 0.00 | 5.68 | x | 1.25 | 7.10 |
| RECEPTACLE LOAD (UPTO 10kVA) | 2.26 | 3.42 | 0.36 | 6.04 | x | 1 | 6.04 |
| HVAC LOAD | 29.09 | 0.00 | 0.00 | 29.09 | x | 0.5 | 14.55 |
| KITCHEN EQUIPMENT LOAD | 14.55 | 21.79 | 44.39 | 80.73 | x | 0.65 | 52.47 |
| OTHER LOAD | 0.36 | 2.28 | 0.00 | 2.64 | x | 1 | 2.64 |
| LARGEST MOTOR LOAD | | | | 29.00 | X | 0.25 | 7.25 |
| RECEPTACLE LOAD (ABOVE 10kVA) | | | | 0.00 | X | 0 | 0 |
| NON COINCIDENT LOAD (-) | | | | | | | |
| TOTAL DEMAND LOAD IN (kVA) | | | | | | | 90.05 |
| TOTAL DEMAND CURRENT IN (A) | | | | | | 208V | 250.25 |
| ELECTRICAL SERVICE SIZE (IN AMPS) @ 208Y/120V, 3 PHASE | | | | | | | 320A |

# ELECTRICAL RISER DIAGRAM

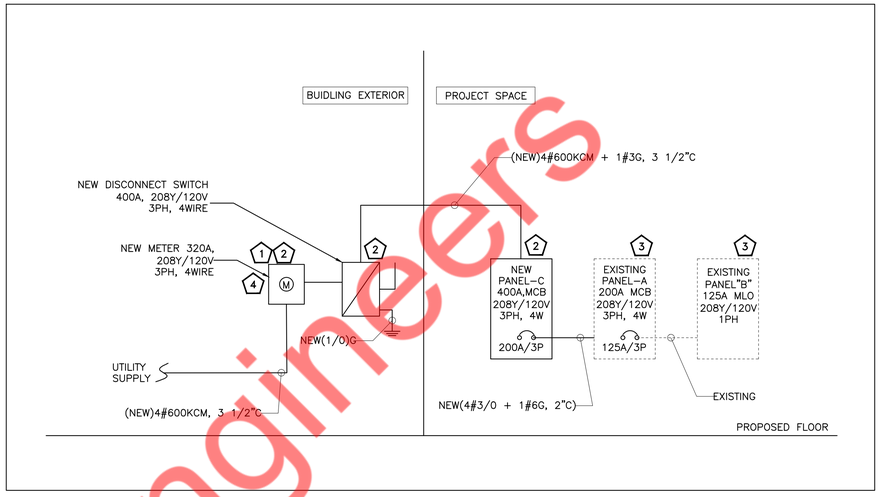


ELECTRICAL RISER SYMBOLS:

- NEW
- EXISTING ITEM/FEEDER TO REMAIN
- EXISTING ITEM/FEEDER TO BE DISCONNECTED & REMOVED N

## RISER DIAGRAM KEYED WORK NOTES (#)

1. THE E.C. SHALL UPGRADE THE EXISTING 200A, 208Y/120V, 3PH, 4W ELECTRICAL SERVICE TO 320A, 208Y/120V, 3PH, 4W IN COORDINATION WITH THE UTILITY/OWNER BEFORE THE BID.
2. THE E.C. SHALL COORDINATE WITH OWNER/ARCHITECT FOR THE EXACT LOCATION OF THE NEW ELECTRICAL EQUIPMENT IN THE FIELD.
3. THE E.C. SHALL VERIFY THE EXACT LOCATION, RATING, AND OPERABLE CONDITION OF EVERY EQUIPMENT MARKED EXISTING IN THE FIELD. INFORM THE ENGINEER OF RECORD OF ANY DISCREPANCY, BEFORE BIDING.
4. THE E.C. SHALL INSTALL A 400A, 208Y/120V, 3PH, 4W ELECTRICAL METER AND CT CABINET IF THE OWNER REQUIRES ADDITIONAL SPARE AMPERAGE CAPACITY FOR THE PROJECT SPACE. COORDINATE WITH THE OWNER PRIOR TO INSTALLATION TO CONFIRM REQUIREMENTS.

## RISER GENERAL NOTE:

A. E.C. SHALL COORDINATE WITH UTILITY FOR THE AVAILABLE FAULT CURRENT AND VERIFY AIC RATING OF THE EXISTING DEVICES IN FIELD ACCORDINGLY.

B. E.C. SHALL VERIFY INCOMING SERVICE AMPERAGE, WIRE SIZING AND DISTRIBUTION.

C. E.C. SHALL VERIFY THE EXISTING POWER DISTRIBUTION IN FIELD AND INFORM ENGINEER FOR ANY DISCREPANCY BEFORE COMMENCING ANY WORK.

D. E.C TO VERIFY SCOPE OF WORK WITH OWNER/LANDLORD PRIOR TO BID.

E. THE PART OF RISER MARKED AS EXISTING IS FOR REFERENCE PURPOSE ONLY. E.C. SHALL VERIFY THAT THE RISER MATCHES THE SITE CONDITION.

F. ENSURE THE COMBINED VOLTAGE DROP OF THE FEEDER AND BRANCH CIRCUIT SHALL NOT EXCEED 5% PER CODE.

G. COORDINATE THE EXACT LOCATION OF ALL THE NEW ELECTRICAL COMPONENTS SHOWN ON THE RISER. AND ENSURE THE CLEAR WORKING AND DEDICATED SPACE HAS BEEN PROVIDED AS PER NEC 110.26.

H. ADDITION OR ALTERATION TO THE EXISTING SYSTEM SHALL NOT BE DONE WITHOUT THE WRITTEN CONSENT OF THE OWNER.

I. REFER POWER PLAN FOR PROPOSED LOCATION OF THE ELECTRICAL PANEL. INFORM ENGINEER ON RECORD FOR ANY DISCREPANCY.

## PANEL SCHEDULE GENERAL NOTE

A. CONTRACTOR SHALL VERIFY BREAKER AND BRANCH CIRCUIT REQUIREMENTS FOR THE EQUIPMENT IN THE FIELD.

B. THE ELECTRICAL LOAD IS BALANCED WITHIN 10% FOR ALL 3 PHASES.

C. THE VOLTAGE DROP FOR THE BRANCH CIRCUIT SHALL NOT EXCEED 3%.

D. GFI MARKED ON THE PLAN INDICATES THAT THE CIRCUIT SHALL BE GFI PROTECTED. E.C. SHALL PROVIDE A GFCI BREAKER IN THE PANEL FOR THE INDICATED CIRCUIT IF EITHER THE RECEPTACLE IS NOT AVAILABLE OR NOT READILY ACCESSIBLE.

E. COORDINATE AVAILABLE FAULT CURRENT (AIC RATING) WITH UTILITY/LANDLORD/OWNER. CALCULATE THE EXACT AIC RATING OF EACH PANEL IN THE FIELD. AIC RATING SHALL BE WRITTEN ON EACH PANEL AS PER STANDARD.

F. PROVIDE BREAKER LOCKING DEVICES IN THE PANELS, WHERE EVER REQUIRED BY CODE. INCLUDING BUT NOT LIMITED TO EMERGENCY LIGHTING, FIRE ALARM CIRCUITS, AND HARD-WIRED EQUIPMENT.

G. THE BREAKER FEEDING HVAC UNITS SHALL BE HACR TYPE.

H. THE CONTRACTOR SHALL MODIFY THE BREAKERS OF THE EXISTING PANEL (WHEREVER REQUIRED) TO BE IN LINE WITH THE PANEL SCHEDULE.

I. REPLACE THE EXISTING OR PROVIDE A NEW BREAKER IF THE EXISTING IS INOPERABLE.

J. ALL EXISTING CIRCUITS SHOWN ON THE EXISTING ELECTRICAL PANELS ARE FOR REFERENCE PURPOSE ONLY. E.C. TO FIELD VERIFY AND INFORM ENGINEER OF RECORD BEFORE BID.

K. THE CONTRACTOR IS TO PROVIDE A CIRCUIT DIRECTORY FOR EACH PANEL BOARD.

SHEET HISTORY SCHEDULE

| | | |
|---|---|---|
| | | |
| | | |
| | | |
| | | |
| | | |

ISSUE DATE: 10/16/2024 12:02:18 PM

RENOVATION BUILT -OUT

ZEITLIN'S DELICATESSEN

DRAWN BY: NYE
QAQC: NYE
APPROVED BY: NYE
PROJECT NUMBER: 2432

ELECTRICAL PANEL SCHEDULE AND RISER DIAGRAM

E4.0

Property of NY Engineers

## PLUMBING SYMBOLS LIST

| Symbol | Description |
|---|---|
| — SAN — | SANITARY SEWER (ABOVE FLOOR) |
| — EX.SAN — | EXISTING SANITARY SEWER (ABOVE FLOOR) |
| — GSAN — | GREASE SANITARY SEWER (UNDER FLOOR) |
| — GSAN — | GREASE SANITARY SEWER (ABOVE FLOOR) |
| – – – – – | VENT PIPING |
| —— - —— | COLD WATER PIPING |
| —— - - —— | HOT WATER PIPING |
| —— - - - —— | HOT WATER RETURN PIPING |
| —— G —— | GAS PIPING |
| ——ƎO | P-TRAP |
| ——O | PIPE UP |
| ——Ͻ | PIPE DROP |
| —⊙ —‖ | CLEANOUT |
| ——‖ | PLUGGED OUTLET/CLEANOUT |
| ◕ | POINT OF CONNECTION |
| ▼ | GAS VALVE |

## PLUMBING ABBREVIATIONS

| | |
|---|---|
| CO | CLEANOUT |
| CW | COLD WATER |
| HW | HOT WATER |
| HWR | HOT WATER RETURN |
| SAN | SANITARY |
| V | VENT |
| LAV | LAVATORY |
| WC | WATER CLOSET |
| TYP. | TYPICAL |
| DN | DOWN |
| FD | FLOOR DRAIN |
| BFP | BACK FLOW PREVENTER |
| WH | WATER HEATER |
| N.I.C. | NOT IN SCOPE |
| ET-1 | EXPANSION TANK |
| RCP-1 | HOT WATER CIRCULATION PUMP |

## PLUMBING DRAWING LIST

| | |
|---|---|
| P0.1 | PLUMBING NOTES, SYMBOLS, ABBREVIATIONS & SPECIFICATIONS |
| P1.0 | PLUMBING WATER PIPING PLAN |
| P1.1 | PLUMBING SANITARY AND VENT PIPING PLAN |
| P3.0 | PLUMBING DETAILS |
| P4.0 | PLUMBING RISERS AND SCHEDULES |

## BUILDING DEPARTMENT PLUMBING NOTES

1. ALL PLUMBING SYSTEMS (SANITARY, WASTE, VENT, WATER, STORM) AND ASSOCIATED EQUIPMENT SHALL BE INSTALLED, OPERATED AND MAINTAINED IN ACCORDANCE WITH THE REQUIREMENTS OF 2019 CHICAGO PLUMBING CODE.
2. INSTALLATION OF UNDERGROUND PIPING SHALL BE IN ACCORDANCE WITH THE REQUIREMENTS OF SECTION PC 18-29-702.2
3. PROTECTION OF PIPING AND PLUMBING SYSTEM COMPONENTS AS PER SECTION PC 18-29-305.1.
4. TRENCHING, EXCAVATION AND BACKFILL AS PER SECTION PC 18-29-306.2.
5. RODENT PROOFING AS PER PC 18-29-304.4
6. MATERIALS USED IN PLUMBING SYSTEMS SHALL BE IN ACCORDANCE WITH THE REQUIREMENTS OF SECTION PC 18-29-303, 18-29-605.4, 18-29-702, 18-29-902, 18-29-1102.
7. DEEP SEAL TRAPS FOR FLOOR DRAINS SHALL BE PROVIDED AS PER PC 18-29-1002, AND CLEAN-OUTS SHALL BE INSTALLED IN ACCORDANCE WITH THE REQUIREMENTS OF SECTION 18-29-1202.5.4
8. VERTICAL AND HORIZONTAL PIPING SHALL BE SUPPORTED IN ACCORDANCE WITH THE REQUIREMENTS OF SECTION 18-29-308.2
9. WATER SUPPLY SYSTEMS SHALL BE INSTALLED AND MAINTAINED IN ACCORDANCE WITH THE REQUIREMENTS OF CHAPTER 6 SECTION 18-29-604, 605, 606, 607, 608, 610
10. THE SANITARY DRAINAGE SYSTEM SHALL BE SIZED AND INSTALLED IN ACCORDANCE WITH THE REQUIREMENTS OF CHAPTER 7 SECTION PC 18-29-701, 704, 705, 706, 707, 708, 711.
11. VENT PIPING FOR THE SANITARY DRAINAGE SYSTEM SHALL BE INSTALLED IN ACCORDANCE WITH THE REQUIREMENTS OF CHAPTER 9 SECTIONS PC 18-29-901 THROUGH PC 18-29-912 THROUGH PC 18-29-917
12. INSPECTION AND TESTING OF PLUMBING SYSTEMS SHALL BE IN ACCORDANCE WITH SECTION PC 18-29-105.4.6.
13. GAS PIPING INSTALLATION SHALL IN ACCORDANCE WITH INTERNATIONAL FUEL GAS CODE CHAPTER 4

## PLUMBING SPECIFICATIONS

1. BASIC PLUMBING REQUIREMENTS, MATERIALS AND METHODS

1.01 SCOPE

A. PROVIDE ALL MATERIAL, TOOLS, SUPERVISION AND LABOR INCLUDING ALL MISCELLANEOUS AND INCIDENTAL ITEMS REQUIRED FOR COMPLETE AND OPERABLE PLUMBING INSTALLATIONS AS SHOWN OR DESCRIBED ON THE DRAWINGS AND IN THESE SPECIFICATIONS.

B. THE CONTRACTOR SHALL BE RESPONSIBLE FOR THE PROTECTION OF ALL EXISTING AND NEW CONDITIONS AND MATERIALS WITHIN THE CONSTRUCTION AREA. ANY DAMAGE CAUSED BY THE CONTRACTOR SHALL BE REPAIRED TO THE OWNER'S SATISFACTION.

C. OBTAIN ALL PERMITS, PAY ALL PERMIT FEES AND SCHEDULE ALL REQUIRED INSPECTIONS. COPIES OF ALL PERMITS AND INSPECTION CERTIFICATES SHALL BE FORWARDED TO THE OWNER FOR RECORD.

D. THE GENERAL CONDITIONS OF THE CONTRACT AND ALL DIVISION 1 REQUIREMENTS APPLY TO THE WORK OF THIS SECTION.

E. THE CONTRACTOR SHALL VISIT THE SITE PRIOR TO SUBMITTING BID TO DETERMINE CONDITIONS AND THE EXTENT OF THE WORK. BY COMMENCING WORK, THE CONTRACTOR ACKNOWLEDGES HIS CONFIRMATION OF ALL CONDITIONS AS ACCEPTABLE WITH REFERENCE TO HIS CONTRACT, SCOPE OF WORK AND BID PRICE SUCH THAT NO ADDITIONAL COMPENSATION SHALL BE FORTHCOMING FOR UNFORESEEN EXISTING CONDITIONS.

F. IN ALL AREAS SUBJECT TO FREEZING CONDITIONS, THE CONTRACTOR SHALL PROVIDE FREEZE PROTECTION FOR ALL DOMESTIC WATER PIPING INSTALLED UNDER HIS CONTRACT.

G. ALL ELECTRICAL REQUIREMENTS SHALL BE COORDINATED WITH THE CONTRACTOR FOR ELECTRICAL WORK. THIS CONTRACTOR IS RESPONSIBLE FOR ALL LOW VOLTAGE WIRING FOR EQUIPMENT INSTALLED UNDER HIS CONTRACT. THE CONTRACTOR FOR ELECTRICAL WORK IS RESPONSIBLE FOR LINE VOLTAGE POWER WIRING ONLY.

H. COLOR AND FINISH SELECTIONS FOR ALL MATERIALS, INCLUDING PAINTING OF PIPING, SHALL BE AS DIRECTED AND/OR APPROVED BY THE ARCHITECT.

I. MINOR DETAILS NOT SHOWN OR SPECIFIED, BUT NECESSARY FOR THE PROPER AND ACCEPTABLE CONSTRUCTION, INSTALLATION OR OPERATION OF ANY PART OF THE WORK AS DETERMINED BY THE ENGINEER SHALL BE INCLUDED AS IF SPECIFIED OR INDICATED ON THE DRAWINGS.

J. THIS CONTRACTOR SHALL BE RESPONSIBLE FOR COORDINATING ALL REQUIREMENTS FOR THE INSTALLATION, CONNECTION, EXTENSION OR MODIFICATION TO ALL UTILITY SERVICES WITH RESPECTIVE PROVIDERS INCLUDING PAYMENT OF ALL ASSOCIATED FEES.

K. THE CONTRACTOR IS RESPONSIBLE FOR ALL PAINTING ASSOCIATED WITH CUTTING AND PATCHING. ALL PAINTING IN AREAS WITH COMPLETE FINISH RENOVATIONS SHALL BE PROVIDED BY THE GENERAL CONTRACTOR.

1.02 SUBMITTALS

A. SUBMITTAL REQUIREMENTS SHALL BE COORDINATED WITH THE ARCHITECT AND AUTHORITIES HAVING JURISDICTION. UNLESS OTHERWISE DIRECTED, CONTRACTOR SHALL PROVIDE SUBMITTALS AS LISTED BELOW.

1. PIPE AND FITTINGS
2. VALVES
3. HANGERS AND SUPPORTS
4. PLUMBING PIPING LAYOUT
5. TESTS
6. PLUMBING FIXTURES
7. WATER HEATERS & ACCESSORIES
8. MIXING VALVES
9. ALL SCHEDULED PLUMBING EQUIPMENT

B. SUBMITTALS FROM SUPPLIERS OR MANUFACTURERS WHICH DO NOT BEAR THE STAMP OF THE SUBMITTING CONTRACTOR INDICATING THAT THE CONTRACTOR HAS REVIEWED THE SUBMITTAL FOR CONFORMANCE WITH THE PROJECT REQUIREMENTS WILL BE RETURNED REJECTED.

C. THE ENGINEER'S REVIEW OF SUBMITTALS IS A COURTESY WHICH DOES NOT RELIEVE THE CONTRACTOR FROM CONFORMING WITH THE CONSTRUCTION DOCUMENTS, REGARDLESS OF THE ACTION INDICATED BY THE SHOP DRAWINGS STAMP.

D. REVIEW OF SHOP DRAWINGS BY THE ENGINEER SHALL BE LIMITED TO THE INITIAL REVIEW, AND A SECOND REVIEW OF ANY REQUIRED RESUBMITTED DATA. IF THE ENGINEER IS REQUIRED TO REVIEW SHOP DRAWINGS FOR A THIRD (OR MORE) SUBMISSION OF THE SAME ITEM, THE CONTRACTOR SHALL BE LIABLE FOR COMPENSATING THE ENGINEER FOR THESE SUBSEQUENT REVIEWS AS PER THE ENGINEER'S CURRENT HOURLY RATE SCHEDULE.

E. SUBMIT PROOF OF APPROVAL AND/OR CONFIRMATION OF SATISFACTORY TEST RESULTS TO THE OWNER AND THE ARCHITECT.

F. SUBMIT TO THE OWNER'S MAINTENANCE PERSONNEL OPERATION AND MAINTENANCE DATA FOR ALL SYSTEM COMPONENTS, SERVICING REQUIREMENTS, INSPECTION DATA, REPLACEMENT PART NUMBERS AND AVAILABILITY AND CONTACT INFORMATION FOR SERVICE/SUPPLY COMPANY.

G. FOR ALL BELOW GRADE PIPING WHERE ACTUAL INSTALLATION DEVIATES FROM CONSTRUCTION DRAWINGS, THE CONTRACTOR SHALL PROVIDE AS-BUILT DRAWINGS INDICATING BELOW GRADE PIPE LOCATIONS DIMENSIONED TO NEAREST COLUMN LINES.

H. RECORD AS-BUILT DRAWINGS SHALL BE SUPPLIED TO THE OWNER/TENANT AFTER COMPLETION OF THE WORK SHOWING ANY ALTERATIONS, ADDITIONS AND/OR DELETIONS TO THE SYSTEM(S) INSTALLED.

1.03 SUBSTITUTIONS

A. ALL EQUIPMENT SHALL BE PRODUCTS OF THE SPECIFIED MANUFACTURER OR MANUFACTURERS. ALL BIDS SHALL BE BASED ON THE SPECIFIED MANUFACTURER OR MANUFACTURER'S EQUIPMENT. FOR SUBSTITUTIONS OF OTHER MANUFACTURER'S EQUIPMENT TO BE CONSIDERED, THE SUBSTITUTION MUST BE INDICATED PRIOR TO BIDDING WITH THE REASON FOR THE PROPOSED SUBSTITUTION IDENTIFIED, AND THE PROPOSED CREDIT TO THE OWNER INDICATED. THE ENGINEER SHALL DETERMINE THE ACCEPTABILITY OF ANY PROPOSED SUBSTITUTIONS.

B. THE CONTRACTOR ASSUMES ALL RESPONSIBILITY FOR COORDINATING THE WORK OF OTHER TRADES WHICH MAY BE AFFECTED BY SUBSTITUTIONS, INCLUDING ALL RELATED COSTS.

1.05 DEFINITIONS

A. FURNISH: TO PURCHASE, PROCURE, ACQUIRE AND DELIVER, COMPLETE WITH RELATED ACCESSORIES.

B. INSTALL: TO ERECT, MOUNT AND CONNECT, COMPLETE WITH RELATED ACCESSORIES.

C. PROVIDE: TO FURNISH AND INSTALL.

D. PLUMBING CONTRACTOR, THE CONTRACTOR, THIS CONTRACTOR: THE CONTRACTOR FOR PLUMBING WORK WHICH IS SPECIFIED HEREIN AND SHOWN ON THESE DRAWINGS.

1.06 DRAWINGS

A. THE DRAWINGS ARE DIAGRAMMATIC AND ARE INTENDED TO ILLUSTRATE THE GENERAL ARRANGEMENT AND ROUTING OF PIPING AND GENERAL LOCATIONS OF EQUIPMENT. PRECISE LOCATIONS OF EQUIPMENT, RISERS AND STACKS, AND ROUTING AND ELEVATION OF ALL PIPING SYSTEMS SHALL BE COORDINATED IN THE FIELD WITH THE ARCHITECT, ARCHITECTURAL DRAWINGS, THE WORK OF OTHER TRADES, EXISTING AND NEW BUILDING CONDITIONS AND/OR THE PREFERENCES OF THE OWNER/TENANT AS CONSTRUCTION PROCEEDS. ALL PIPING SHALL BE INSTALLED CONCEALED IN FINISHED SPACES, UNLESS NOTED OTHERWISE.

B. PROVIDE ALL NECESSARY INCIDENTAL MATERIALS AND ACCESSORIES REQUIRED TO MAKE THE WORK COMPLETE IN ALL RESPECTS, EVEN IF NOT PARTICULARLY SHOWN OR SPECIFIED.

C. REFER TO PLUMBING EQUIPMENT/FIXTURE SCHEDULE ON THE DRAWINGS FOR ALL FIXTURE AND EQUIPMENT SPECIFICATIONS.

D. REFER TO FIXTURE CONNECTION SIZE SCHEDULE FOR ALL FIXTURE ROUGHING SIZE REQUIREMENTS.

E. VERIFY ALL INDICATED CONDITIONS BEFORE STARTING WORK AND REPORT ANY DISCREPANCIES. THE DRAWINGS REFLECT CONDITIONS WHICH CAN BE REASONABLY INTERPRETED FROM THE EXISTING VISIBLE CONDITIONS OR FROM DRAWINGS AND INFORMATION FURNISHED BY THE OWNER.

F. LOCATE ALL FIXTURES AND EQUIPMENT AS PER THE FINAL ARCHITECTURAL DRAWINGS.

1.07 PRODUCTS

A. SANITARY AND VENT PIPING:

1. ABOVE GRADE PIPING SHALL BE HUB CAST IRON PIPE WITH STAINLESS STEEL COUPLINGS AND ELASTOMERIC GASKETS WITH A MINIMUM 4 BANDS PER COUPLING.
2. SLOPE OF DRAINAGE SYSTEM SHALL BE 1/8" PER FOOT OF RUN FOR PIPE OVER 3" (I.D.) AND 1/4" PER FOOT OF RUN FOR PIPE 3" AND SMALLER (I.D.). VENT PIPING SHALL BE PITCHED TO DRAIN.
3. ALL CAST IRON SOIL PIPE AND FITTINGS SHALL BE MARKED WITH THE COLLECTIVE TRADEMARK OF THE CAST IRON SOIL PIPE INSTITUTE (CISPI) AND BE LISTED BY NSF INTERNATIONAL.

B. DOMESTIC WATER PIPING:

1. ABOVE GRADE WATER PIPING SHALL BE TYPE 'L' HARD-DRAWN COPPER TUBE.
2. FITTINGS IN DOMESTIC WATER PIPING SHALL BE WROUGHT COPPER OR CAST BRASS.
3. JOINTS SHALL BE MADE WITH LEAD-FREE SOLDER.
4. THE ENTIRE DOMESTIC WATER DISTRIBUTION SYSTEM SHALL BE INSULATED INCLUDING ALL VALVES, FITTINGS, ETC.
5. COMPLY WITH NSF 61 FOR MATERIALS FOR WATER-SERVICE PIPING AND SPECIALTIES FOR DOMESTIC WATER.
6. ALL DOMESTIC WATER PIPING ABOVE GRADE SHALL BE INSULATED WITH FIRE-RETARDANT, FACTORY-APPLIED JACKET. PROVIDE COLD WATER PIPING WITH FACTORY-APPLIED VAPOR BARRIER. INSULATION REQUIREMENT SHOULD COMPLY WITH 2022 (TITLE 14N) CHICAGO ENERGY CONSERVATION CODE 14N SECTION C403.11.3 REFER BELOW TABLE.

MINIMUM PIPE INSULATION THICKNESS

| FLUID OPERATING TEMPERATURE RANGE AND USAGE (°F) | INSULATION CONDUCTIVITY | | NOMINAL PIPE OR TUBE SIZE (INCHES) | | | | |
|---|---|---|---|---|---|---|---|
| | CONDUCTIVITY BTU?IN./(H?FT2?°F) | MEAN RATING TEMPERATURE, °F | <1 | 1 to < 1½ | 1½ to < 4 | 4 to < 8 | >8 |
| 141-200 | 0.25-0.29 | 125 | 1.5 | 1.5 | 2 | 2 | 2 |
| 105-140 | 0.21-0.28 | 100 | 1.0 | 1.0 | 1.5 | 1.5 | 1.5 |
| 40-60 | 0.21-0.27 | 75 | 0.5 | 0.5 | 1.0 | 1.0 | 1.0 |

7. WATER DISTRIBUTION SYSTEM AS PER 2022 (TITLE 14N) CHICAGO ENERGY CONSERVATION CODE 14N C404.6.1, HAVING ONE OR MORE RECIRCULATION PUMPS THAT PUMP WATER FROM A HEATED-WATER SUPPLY PIPE BACK TO THE HEATED-WATER SOURCE THROUGH A COLD-WATER SUPPLY PIPE SHALL BE A DEMAND RECIRCULATION WATER SYSTEM. PUMPS SHALL HAVE CONTROLS THAT COMPLY WITH BOTH OF THE FOLLOWING:
   a. THE CONTROL SHALL START THE PUMP UPON RECEIVING A SIGNAL FROM THE ACTION OF A USER OF A FIXTURE OR APPLIANCE, SENSING THE PRESENCE OF A USER OF A FIXTURE OR SENSING THE FLOW OF HOT OR TEMPERED WATER TO A FIXTURE FITTING OR APPLIANCE.
   b. THE CONTROL SHALL LIMIT THE TEMPERATURE OF THE WATER ENTERING THE COLD-WATER PIPING TO 104°F (40°C).
8. AS PER 2022 (TITLE 14N) CHICAGO ENERGY CONSERVATION CODE 14N C404.6.1 HEATED-WATER CIRCULATION SYSTEMS SHALL BE PROVIDED WITH A CIRCULATION PUMP. THE SYSTEM RETURN PIPE SHALL BE A DEDICATED RETURN PIPE OR A COLD WATER SUPPLY PIPE. CONTROLS FOR CIRCULATING HOT WATER SYSTEM PUMPS SHALL START THE PUMP BASED ON THE IDENTIFICATION OF A DEMAND FOR HOT WATER WITHIN THE OCCUPANCY. THE CONTROLS SHALL AUTOMATICALLY TURN OFF THE PUMP WHEN THE WATER IN THE CIRCULATION LOOP IS AT THE DESIRED TEMPERATURE AND WHEN THERE IS NO DEMAND FOR HOT WATER.
9. HW SYSTEM PIPING IS DESIGNED AS PER MAXIMUM ALLOWED PIPE LENGTH METHOD AS PER 2022 (TITLE 14N) CHICAGO ENERGY CONSERVATION CODE 14N C404.5.1. THE HW PIPE LENGTH FROM THE NEAREST SOURCE OF HEATED WATER TO THE TERMINATION OF THE FIXTURE SUPPLY PIPE SHALL BE AS PER FOLLOWING TABLE.

| NOMINAL PIPE SIZE (INCHES) | MAXIMUM PIPING LENGTH (FEET) | |
|---|---|---|
| | PUBLIC LAV | OTHER FIXTURES |
| ½" | 2' | 43' |
| ¾" | 0.5' | 21' |
| 1" | 0.5' | 13' |
| 1¼" | 0.5' | 8' |
| 1½" | 0.5' | 6' |
| 2" OR LARGER | 0.5' | 4' |

10. SEAL ALL JOINTS BETWEEN SEGMENTS OF INSULATION.
11. PROVIDE SHIELDS BETWEEN HANGERS AND INSULATION.

C. GAS PIPING:

1. GAS PIPING SHALL BE SIZED IN ACCORDANCE WITH PIPE SIZING TABLES OR SIZING EQUATIONS IN ACCORDANCE WITH IFGC 2000 SECTION 402.3(2).
2. INDIVIDUAL OUTLETS TO GAS RANGES SHALL NOT BE LESS THAN ¾ INCHES NPS.
3. METALLIC PIPE SHALL COMPLY WITH SECTIONS 403.4.1 THROUGH 403.4.4.
4. PIPING SYSTEM INSTALLATION SHALL COMPLY WITH REQUIREMENTS OF IFGC 2000 SECTION 404.
5. AS PER 2000 INTERNATIONAL FUEL GAS CODE, SECTION 404.4 UNDERGROUND PIPING, WHERE INSTALLED BELOW GRADE THROUGH THE OUTER FOUNDATION OR BASEMENT WALL OF A BUILDING, SHALL BE ENCASED IN A PROTECTIVE PIPE SLEEVE. THE ANNULAR SPACE BETWEEN THE GAS PIPING AND THE SLEEVE SHALL BE SEALED.
6. PIPING INSTALLED UNDERGROUND BENEATH BUILDINGS IS PROHIBITED EXCEPT WHERE THE PIPING IS ENCASED IN A CONDUIT OF WROUGHT IRON OR STEEL PIPE DESIGNED TO WITHSTAND THE SUPERIMPOSED LOADS. THE CONDUIT SHALL BE PROTECTED FROM CORROSION IN ACCORDANCE WITH SECTION 404.11
7. AS PER 2000 INTERNATIONAL FUEL GAS CODE SECTION 404.9; UNDERGROUND PIPING SYSTEMS SHALL BE INSTALLED A MINIMUM DEPTH OF 12 INCHES BELOW GRADE.
8. THE GAS PIPING IS ENCASED IN A CONDUIT OF WROUGHT IRON OR STEEL PIPE TO WITH STAND THE SUPERIMPOSED LOADS.
9. SHUTOFF VALVES SHALL BE LOCATED IN PLACES SO AS TO PROVIDE ACCESS FOR OPERATION AND SHALL BE INSTALLED SO AS TO BE PROTECTED FROM DAMAGE.

D. HANGERS AND SUPPORTS:

1. HANGERS SHALL BE STANDARD STEEL, MALLEABLE OR WROUGHT IRON, AS MANUFACTURED BY GRINNELL OR APPROVED EQUAL, SUITABLE FOR THE TYPE OF CONSTRUCTION. PIPING SHALL NOT BE HUNG FROM OTHER PIPE.
2. SECTIONS OF INDIVIDUAL PIPE RUNS SHALL BE SUPPORTED BY CLEVIS HANGERS.
3. ALL EQUIPMENT SHALL BE PROVIDED WITH APPROVED SUPPORTS.
4. PROVIDE SEISMIC RESTRAINTS IN ACCORDANCE WITH ALL APPLICABLE FEDERAL, STATE AND LOCAL CODES AND STANDARDS AND THE REQUIREMENTS OF AUTHORITIES HAVING JURISDICTION.
5. SUPPORTS SHALL BE PROVIDED IN STRICT ACCORDANCE WITH THE RECOMMENDATIONS OF THE PIPING MANUFACTURER.

E. VALVES:

1. PROVIDE GATE VALVES, BUTTERFLY OR BALL VALVES FOR SHUT-OFF DUTY ON MAIN AND BRANCH SUPPLY LINES. FOR ALL PIPE RUNS 2" AND SMALLER, PROVIDE BALL FOR ALL PIPE RUNS LARGER THAN 2" AND SMALLER THAN 4", PROVIDE GATE VALVES. PIPING 4" AND LARGER, PROVIDE BUTTERFLY VALVES FOR SHUT-OFF DUTY.
2. ALL FIXTURES WITH THE EXCEPTION O FLUSHOMETER-EQUIPPED WATER CLOSETS AND URINALS SHALL HAVE STOP VALVES TO CONTROL SUPPLY TO THE FIXTURE. WHERE SUPPLIES ARE EXPOSED PROVIDE CHROME-PLATED STOPS WITH CHROME-PLATED ESCUTCHEONS ON PIPING PENETRATIONS.
3. ALL PLUMBING FIXTURES AND EQUIPMENT TO HAVE SHUT-OFF VALVES ON SUPPLY LINES.
4. ALL BRANCH LINES TO HAVE SHUT-OFF VALVES.
5. ALL VALVES SHALL BE ACCESSIBLE. PROVIDE ACCESS DOORS WHERE REQUIRED FOR VALVE ACCESS.
6. PROVIDE GLOBE VALVES FOR THROTTLING/BALANCING OF THE HOT WATER CIRCULATING SYSTEM.

F. INSTALL PIPING TO CONSERVE BUILDING SPACE. DO NOT INTERFERE WITH USE OF BUILDING SPACE AND THE WORK OF OTHER TRADES. ALL PIPING RUN IN CEILING SHALL BE INSTALLED TIGHT TO THE STRUCTURE ABOVE.

G. INSTALL PIPING TO ALLOW FOR EXPANSION AND CONTRACTION WITHOUT STRESSING PIPE, JOINTS OR CONNECTED EQUIPMENT. PROVIDE PIPE ANCHORS, GUIDES AND EXPANSION JOINTS OR LOOPS IN ALL HOT WATER AND HOT WATER CIRCULATING MAIN SUPPLY PIPING AND SEGMENTS OF SUCH PIPE THAT EXCEED 30'-0" IN LENGTH.

H. IN ALL AREAS WITH FINISHED SURFACES, SYSTEM PIPING AND COMPONENTS SHALL BE CONCEALED ABOVE OR WITHIN FINISHED SURFACES.

I. REDUCTIONS IN PIPE SIZES SHALL BE MADE WITH ONE-PIECE REDUCING FITTINGS. BUSHINGS ARE NOT ACCEPTABLE. USE FLANGED FITTINGS AT THE BASE OF RISERS.

J. VENT PENETRATIONS THROUGH THE ROOF SHALL BE FLASHED.

K. IF WATER PRESSURE EXCEEDS 80 PSI, A WATER PRESSURE REDUCING VALVE SHALL BE INSTALLED IN WATER PIPING AT CONNECTION TO MAIN.

L. PIPE BACKFLOW PREVENTER DRAINS TO FLOOR DRAIN OR OTHER APPROVED INDIRECT WASTE SOURCE.

M. PROVIDE ACCESS DOORS/PANELS FOR SERVICE AND ACCESS TO ALL VALVES AND OTHER SYSTEM COMPONENTS ENCLOSED IN WALLS AND CEILINGS. ACCESS DOORS SHALL BE FURNISHED BY THIS CONTRACTOR, INSTALLED BY THE GENERAL CONTRACTOR.

N. ALL FIXTURES REQUIRING VACUUM BREAKERS SHALL BE EQUIPPED WITH INTEGRAL VACUUM BREAKERS.

O. ANY PENETRATIONS THROUGH FIRE RATED PARTITIONS, FLOORS, OR CEILINGS SHALL BE STEEL SLEEVED AND SEALED WITH 3M BRAND UL RATED FIRE BARRIER CAULK OR APPROVED EQUAL.

P. WHEN THE WATER PIPING SYSTEM IS COMPLETE, THOROUGHLY FLUSH ALL DIRT, SEDIMENT, SOLDER, ETC., OUT OF THE SYSTEM, REMOVING ALL STRAINERS, VALVE STEM SEATS, ETC., REQUIRED TO ACCOMPLISH THE FLUSHING.

Q. AT ALL INDIRECT WASTE DRAINS, MAINTAIN AIR GAP AS REQUIRED BY CODE.

INSTALL SLEEVES FOR ALL PIPES WHICH PASS THROUGH WALLS, FLOORS, AND CEILINGS. WHERE PIPES ARE TO BE INSULATED, THE SLEEVE SHALL BE LARGE ENOUGH TO ACCOMMODATE INSULATION. SLEEVES SHALL BE FLUSH WITH FINISHED SURFACES AT BOTH ENDS. ON FINISHED SURFACES IN EXPOSED AREAS PROVIDE ESCUTCHEONS COMPATIBLE WITH FINISH.

2. INSTALLATION

2.01 GENERAL

a. ALL WORK WHICH REQUIRES DISRUPTION OF THE ROOFING SHALL BE DONE BY A CONTRACTOR CERTIFIED BY THE ROOFING MANUFACTURER AS REQUIRED TO MAINTAIN ANY EXISTING ROOF WARRANTIES.

b. EXTERIOR INSTALLATIONS TO BE WEATHER PROOF IN ALL RESPECTS.

c. EXTERIOR MATERIALS AND EQUIPMENT SHALL BE PAINTED TO PREVENT CORROSION, COLOR PER ARCHITECT.

d. COORDINATE THE PLUMBING WORK WITH ALL OTHER AFFECTED WORK AND THE CONSTRUCTION SCHEDULE.

e. REAM PIPE AND TUBE ENDS. REMOVE BURRS. BEVEL PLAIN AND FERROUS END PIPE.

f. REMOVE SCALE AND FOREIGN MATERIAL, FROM INSIDE AND OUTSIDE, BEFORE ASSEMBLY.

g. PREPARE PIPING CONNECTIONS TO EQUIPMENT WITH FLANGES AND UNIONS.

h. COORDINATION WITH THE WORK OF OTHER TRADES IS REQUIRED. PROVIDE OFFSETS IN PIPING SYSTEMS OR MINOR DEVIATIONS TO THE INDICATED PIPE ROUTING IN ORDER TO COORDINATE THE PLUMBING WORK WITH THE WORK OF ALL OTHER TRADES AND THE GENERAL BUILDING CONDITIONS.

i. NO DOMESTIC WATER PIPING SHALL BE INSTALLED IN UNHEATED SPACES.

j. PRIOR TO DISCONNECTING AND CONNECTING NEW WORK TO EXISTING SYSTEMS, THE PLUMBING CONTRACTOR SHALL NOTIFY THE PROPERTY MANAGER AND OFFER A PROPOSED SCHEDULE OF WORK. ESB WILL AUTHORIZE CONNECTIONS AND COORDINATE NECESSARY SHUT DOWNS AND DRAIN DOWNS AS REQUIRED. SHUT DOWNS AND DRAIN DOWNS MAY BE PERFORMED BY THE PLUMBING CONTRACTOR ONLY AFTER RECEIVING ESB AUTHORIZATION, AND SHOULD BE PERFORMED UNDER SUPERVISION OF ESB PERSONNEL. THREE (3) DAYS ADVANCE NOTICE TO THE PROPERTY MANAGER IS REQUIRED.

k. THE PLUMBING CONTRACTOR IS ADVISED THAT DUE TO THE NATURE OF THE OPERATIONS AND TENANT REQUIREMENTS, CONNECTIONS TO EXISTING SYSTEMS MAY HAVE TO BE MADE AFTER REGULAR WORKING HOURS. THE PROPERTY MANAGER WILL ADVISE THE PLUMBING CONTRACTOR OF THE TIME CONSTRAINTS UPON RECEIPT AND APPROVAL OF THE PLUMBING CONTRACTOR'S REQUEST FOR SHUT DOWN AND CONNECTION TO EXISTING SYSTEMS.

l. WHEN CONNECTING TO EXISTING STACKS AND RISERS, PROVISION IS TO BE MADE FOR FUTURE CONNECTIONS BY PROVIDING CAPPED AND VALVED OUTLETS ON DOMESTIC WATER RISERS AND PLUGGED OUTLETS ON THE SANITARY AND VENT STACKS.

2.02 ABOVE GRADE

A. INSTALL PLUMBING PIPING IN ACCORDANCE WITH RECOGNIZED INDUSTRY PRACTICES TO ENSURE THAT PIPING COMPLIES WITH REQUIREMENTS AND SERVES INTENDED PURPOSES.

B. ROUTE PIPING IN AN ORDERLY MANNER, PLUMB AND PARALLEL TO BUILDING STRUCTURE. MAINTAIN GRADIENT. SLOPE PIPING AND ARRANGE SYSTEMS TO DRAIN. IN DOMESTIC WATER SYSTEMS, PROVIDE DRAIN VALVES AT MAIN SHUT-OFF VALVES AND ALL LOW POINTS IN PIPING.

C. USE EXISTING CONNECTIONS AT MAINS WHERE AVAILABLE FOR NEW BRANCH PIPING. LOCATE ALL RISERS AND PIPING BEFORE CONSTRUCTION COMMENCES AND TAKE CARE NOT TO DAMAGE SAME. ANY DAMAGE OCCURRING TO THE EXISTING PIPING WILL BE THE SOLE RESPONSIBILITY OF THE CONTRACTOR.

3. TESTING

A. AT THE COMPLETION OF THE PLUMBING WORK, COMPLETELY TEST THE ENTIRE INSTALLATION OF ALL SYSTEMS FOR PROPER OPERATION AND COMPLIANCE WITH APPLICABLE CODES AND LOCAL REQUIREMENTS. CORRECT ALL DEFICIENCIES FOUND.

B. TESTING OF THE INSTALLED SYSTEMS SHALL BE MADE BY THE CONTRACTOR IN THE PRESENCE OF A REPRESENTATIVE OF THE OWNER.

C. THE CONTRACTOR SHALL NOT COVER UP OR PERMANENTLY CONCEAL PIPING, DEVICES OR ANY PORTION OF NEWLY CONSTRUCTED PLUMBING SYSTEM(S) UNTIL SUCH SYSTEM, OR PORTION OF THE SYSTEM, HAS BEEN TESTED IN THE PRESENCE OF A REPRESENTATIVE OF THE OWNER AND INSPECTED BY THE LOCAL INSPECTOR AND APPROVED IN WRITING, EXCEPT PIPING PASSING THROUGH FLOORS, WALLS, PARTITIONS, OR BEAMS, FOR DISTANCES EQUAL TO THE THICKNESS OF SUCH FLOOR, WALL, PARTITION OR BEAM.

D. THIS CONTRACTOR SHALL NOTIFY THE VARIOUS DEPARTMENTS, BUREAUS AND INDIVIDUALS AT LEAST TWO WEEKS IN ADVANCE OF THE TIME THAT THE TESTS ARE TO BE CONDUCTED.

E. ALL DEFECTIVE PARTS SHALL BE REPLACED OR CORRECTED BY THIS CONTRACTOR AND AN EXTRA TEST OR TESTS SHALL BE MADE UNTIL THE OPERATION IS SATISFACTORY. ALL ARRANGEMENTS AND EXPENSES NECESSARY TO CONDUCT ALL TESTS REQUIRED BY THESE SPECIFICATIONS AND THE VARIOUS AGENCIES HAVING JURISDICTION OVER THE WORK INSTALLED UNDER THIS CONTRACT SHALL BE MADE BY THIS CONTRACTOR. NO EXTRA COMPENSATION WILL BE ALLOWED FOR THESE TESTS, THE COST THEREOF BEING INCLUDED IN THE LUMP SUM BID FOR THIS CONTRACT.

F. WHERE ANY EVIDENCE OF STOPPAGE IS FOUND IN PIPING OR EQUIPMENT, THIS CONTRACTOR SHALL DISCONNECT, CLEAN, REPAIR AND RECONNECT ALL OBSTRUCTED PIPING OR EQUIPMENT AND SHALL ALSO PAY FOR ALL NECESSARY CUTTING AND REPAIRS TO ADJOINING WORK.

G. ALL PIPING AND EQUIPMENT SHALL BE THOROUGHLY CLEANED INSIDE AND OUT, OF DIRT, CUTTINGS, OILS AND OTHER FOREIGN SUBSTANCES AND SHALL BE LEFT CLEAN.

H. ALL REQUIRED TESTS SHALL BE WITNESSED BY LOCAL AUTHORITIES AND THE OWNER'S REPRESENTATIVE.

J. ALL EQUIPMENT WILL BE FACTORY TESTED.

I. CONTRACTOR SHALL IDENTIFY TO THE OWNER'S REPRESENTATIVE ANY LEAKS OR DAMAGE THAT OCCURS AS A RESULT OF SYSTEM TESTING. CONTRACTOR SHALL TAKE NECESSARY PRECAUTIONS TO LIMIT ANY POTENTIAL DAMAGE. CORRECTIVE ACTION REQUIRED AS A RESULT OF TESTING SHALL BE PERFORMED IMMEDIATELY AND AT THE CONTRACTOR'S EXPENSE.

K. REPORT IN WRITING TO AUTHORITIES HAVING JURISDICTION, THE ARCHITECT AND THE OWNER THE RESULTS OF ALL TESTING.

L. TESTING REQUIREMENTS
   a. TEST ALL DOMESTIC WATER PIPING HYDROSTATICALLY TO 125 PSIG.
   b. HYDROSTATIC TEST PRESSURES SHALL REMAIN CONSTANT WITH NO VARIATION FOR 120 MINUTES.
   c. TESTS SHALL BE WITNESSED BY THE BUILDING ENGINEER.
   d. THE PLUMBING CONTRACTOR WILL BE HELD RESPONSIBLE FOR ALL DAMAGE DUE TO TEST FAILURES AND LEAKAGE IN THE TEST AREA AND ADJACENT TENANT OR ESB SPACES.

M. REFILL ENTIRE POTABLE HOT AND COLD WATER SUPPLY SYSTEM WITH CHLORINE SOLUTION (HTH OLIN CHEMICAL CORP.) AT A STRENGTH TO MEET STANDARDS OF THE DEPARTMENT OF HEALTH, AND FOR A PERIOD OF RETENTION AS STIPULATED.

N. THOROUGHLY FLUSH PIPING SYSTEM WITH FRESH WATER IMMEDIATELY PRIOR TO FINAL ACCEPTANCE.

4. WARRANTY

A. EQUIPMENT, MATERIALS AND WORKMANSHIP FURNISHED UNDER THIS CONTRACT SHALL BE GUARANTEED BY THE CONTRACTOR FOR A PERIOD OF ONE YEAR FROM THE DATE OF FINAL ACCEPTANCE OF THE WORK BY THE OWNER. THE CONTRACTOR SHALL KEEP THE WORK IN GOOD REPAIR FOR ONE YEAR AFTER THE DATE OF FINAL APPROVAL. THE CONTRACTOR SHALL, AT HIS OWN EXPENSE, PROMPTLY CORRECT AND REPAIR ANY AND ALL BREAKS, FAILURES OR WEAR DUE TO FAULTY MATERIALS, WORKMANSHIP OR EQUIPMENT. ALL SETTLEMENTS OF SURFACES THAT MAY OCCUR WITHIN THAT PERIOD SHALL ALSO BE PROMPTLY REPAIRED.

Property of NY Engineers

SHEET HISTORY SCHEDULE

| | | |
|---|---|---|
| | | |
| | | |
| | | |
| | | |
| | | |

ISSUE DATE: 10/16/2024 12:02:18 PM

RENOVATION BUILT -OUT

**ZEITLIN'S DELICATESSEN**

DRAWN BY: NYE

QAQC: NYE

APPROVED BY: NYE

PROJECT NUMBER: 2432

PLUMBING NOTES, SYMBOLS, ABBREVIATIONS & SPECIFICATIONS

**P0.1**

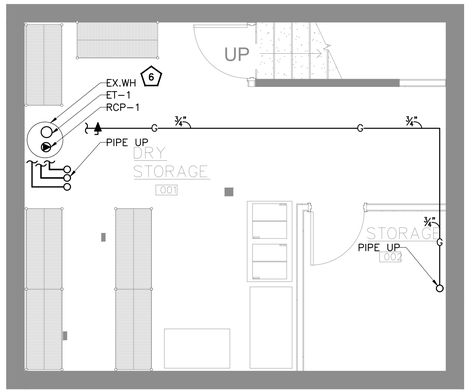


1 P1.0 **BASEMENT PLUMBING WATER PIPING GAS PLAN**
SCALE: 1/4" = 1'-0"

## PLUMBING KEYED NOTES:

1. ROUTE NEW 1-1/4" CW PIPING WITH SHUT OFF VALVE AND TIE-INTO THE EXISTING WATER LINE. CONTRACTOR TO FIELD VERIFY EXISTING WATER SIZE AND LOCATION PRIOR TO BID.
2. PROVIDE ASSE 1022 APPROVED BACKFLOW PREVENTER TO COFFEE MACHINE AND ESPRESSO MACHINE FOR BACKFLOW PREVENTION. INSTALL BFP AN ACCESSIBLE LOCATION.
3. EXISTING WATER CLOSET WITH EXISTING WATER PIPING, ASSOCIATED ACCESSORIES AND FITTINGS TO REMAIN. CONTRACTOR TO FIELD VERIFY EXISTING CONDITION OF EXISTING PIPING AND FIXTURE REPLACED IF REQUIRED.
4. PROVIDE A TEMPERING VALVE FOR HAND SINK AND LAVATORY THAT CONFORMS TO ASSE 1070.
5. CONNECT NEW 2" GAS LINE TO EXISTING GAS METER. CONTRACTOR TO FIELD VERIFY EXISTING GAS METER CAPACITY IS EQUAL TO OR GREATER THAN 1118.742 CFH UPGRADE GAS METER IF REQUIRED. COORDINATE ALL WORK WITH UTILITY COMPANY AND LANDLORD.
6. CONTRACTOR TO FIELD VERIFY EXISTING AVAILABLE GAS PRESSURE AND MAKE SURE TO PROVIDE ADEQUATE INLET PRESSURE REQUIRED FOR GAS FIRED WATER HEATER AND KITCHEN, MECHANICAL EQUIPMENT.
7. GAS PIPE RUNNING AT ROOF.
8. PROVIDE ASSE 1012 APPROVED BACKFLOW PREVENTER TO ICE MACHINE FOR BACKFLOW PREVENTION. INSTALL BFP AN ACCESSIBLE LOCATION.
9. EXPOSED PIPES AT THE OPEN CEILING.

## GENERAL NOTES:

1. CONTRACTOR TO FIELD VERIFY FEASIBILITY OF SLAB PENETRATION AS PER STRUCTURAL REQUIREMENT.
2. CW/HW PIPING TO BE PROVIDED WITH INSULATION AS PER 2022 (TITLE 14N) CHICAGO ENERGY CONSERVATION CODE 14N EDITION (REFER SHEET P0.1)
3. PROVIDE BRANCH PRV IF PRESSURE EXCEEDS 80 PSI.
4. PROVIDE ACCESS PANELS FOR WATER HAMMER ARRESTOR, CLEANOUTS & SHUT-OFF VALVES AS REQUIRED.
5. REFER RISER DIAGRAMS FOR ALL PIPE SIZES.
6. PROVIDE TRAP PRIMER FOR FLOOR DRAIN AS PER LOCAL JURISDICTION.

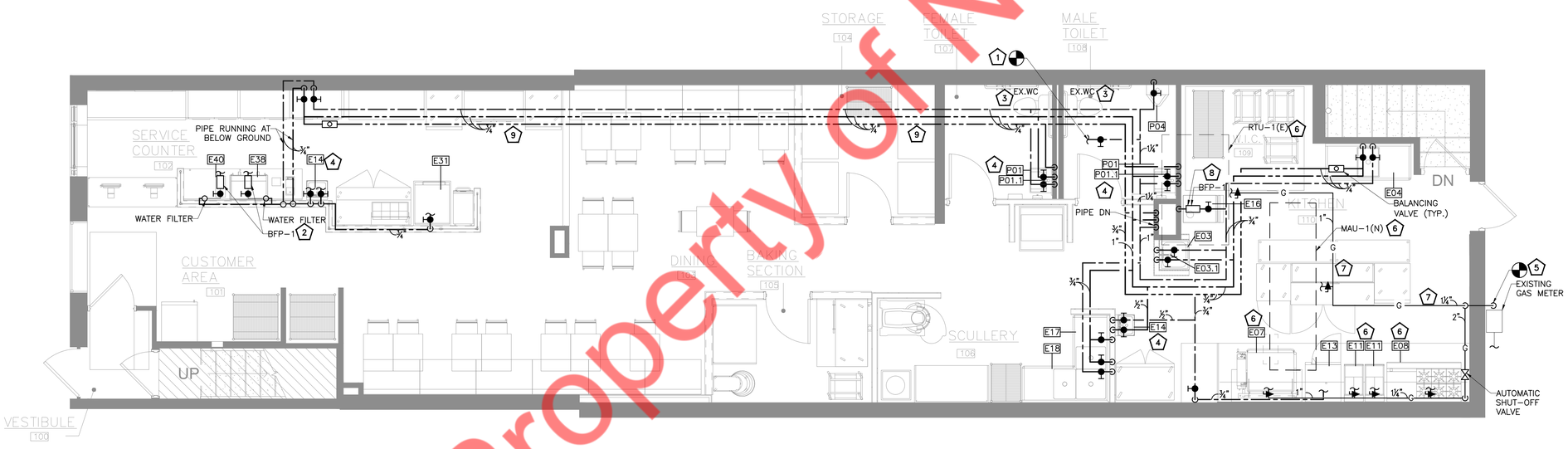


2 P1.0 **FIRST FLOOR PLUMBING WATER AND GAS PIPING PLAN**
SCALE: 1/4" = 1'-0"

Property of NY Engineers

GRAPHIC SCALE: 1/4" = 1'-0"
0 4' 8' 12' 16'

**SHEET HISTORY SCHEDULE**

| | | |
|---|---|---|
| | | |
| | | |
| | | |
| | | |
| | | |

| | |
|---|---|
| ISSUE DATE: | 10/16/2024 12:02:18 PM |

**RENOVATION BUILT -OUT**

**ZEITLIN'S DELICATESSEN**

| | |
|---|---|
| DRAWN BY: | NYE |
| QAQC: | NYE |
| APPROVED BY: | NYE |
| PROJECT NUMBER: | 2432 |

**PLUMBING WATER AND GAS PIPING PLAN**

**P1.0**

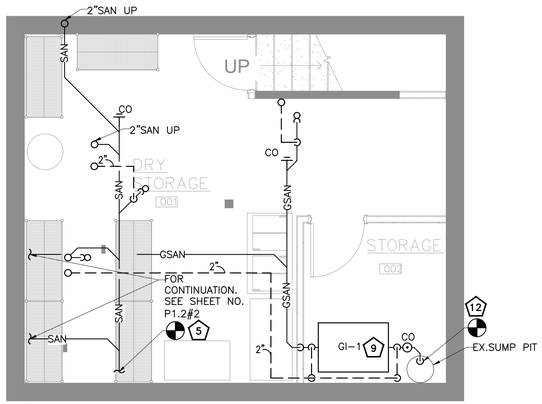


1 P1.1 **BASEMENT PLUMBING SANITARY AND VENT PIPING PLAN**
SCALE: 1/4" = 1'-0"

## PLUMBING KEYED NOTES:

1. INDIRECT DRAIN FROM 3-COMPARTMENT SINK TO FLOOR SINK WITH APPROVED AIR GAP.
2. INDIRECT DRAIN FROM 1-COMPARTMENT SINK TO FLOOR SINK WITH APPROVED AIR GAP.
3. INDIRECT DRAIN FROM ICE MACHINE TO FLOOR SINK WITH APPROVED AIR GAP.
4. CONNECT NEW 2" SANITARY LINE TO EXISTING SANITARY WASTE LINE IN SPACE. CONTRACTOR TO FIELD VERIFY EXISTING SANITARY SIZE, ROUTING AND INVERT PRIOR TO BID.
5. CONNECT NEW 4" SANITARY LINE TO EXISTING SANITARY WASTE LINE IN SPACE. CONTRACTOR TO FIELD VERIFY EXISTING SANITARY SIZE, ROUTING AND INVERT PRIOR TO BID.
6. CONNECT NEW 3" VENT LINE TO EXISTING VENT LINE. CONTRACTOR VERIFY EXISTING VENT LINE EXACT LOCATION AND SIZE.
7. CONNECT NEW 2" VENT LINE TO EXISTING VENT LINE. CONTRACTOR VERIFY EXISTING VENT LINE EXACT LOCATION AND SIZE
8. EXISTING WATER CLOSET WITH EXISTING SANITARY, VENT WITH ASSOCIATED ACCESSORIES AND FITTINGS TO REMAIN. CONTRACTOR TO FIELD VERIFY EXISTING CONDITION OF EXISTING PIPING AND FIXTURE REPLACED IF REQUIRED.
9. GI-1 GREASE INTERCEPTOR SCHIER GB-75 OR EQUIVALENT. CONTRACTOR TO INSTALL GREASE INTERCEPTOR AS PER MANUFACTURER RECOMMENDATION AND LOCAL GUIDELINES. CONTRACTOR TO COORDINATE WITH LANDLORD AND ENGINEER FOR FINAL LOCATION.
10. INDIRECT DRAIN FROM DISHWASHER TO FLOOR SINK WITH APPROVED AIR GAP.
11. INDIRECT DRAIN FROM ESPRESSO MACHINE TO FLOOR SINK WITH APPROVED AIR GAP.
12. CONNECT NEW 4" SANITARY LINE TO EXISTING SUMP PIT IN SPACE. CONTRACTOR TO FIELD VERIFY EXISTING SUMP PIT CAPACITY, SIZE. UPGRADE IF REQUIRED BASE BID ACCORDINGLY.
13. EXISTING FLOOR DRAIN TO REMAIN WITH EXISTING PIPING AND FITTINGS. CONTRACTOR TO FIELD VERIFY EXISTING FLOOR DRAIN, PIPING WORKING CONDITION AND SIZE. REPLACE AND MOVE AS REQUIRED. EXISTING FLOOR DRAINS SHOWING ON PLAN FOR REFERENCE ONLY. BASE BID ACCORDINGLY.
14. EXPOSED PIPES AT THE OPEN CEILING.

## GENERAL NOTES:

1. CONTRACTOR TO FIELD VERIFY FEASIBILITY OF SLAB PENETRATION AS PER STRUCTURAL REQUIREMENT.
2. PROVIDE ACCESS PANELS FOR WATER HAMMER ARRESTOR, CLEANOUTS & SHUT-OFF VALVES AS REQUIRED.
3. REFER RISER DIAGRAMS FOR ALL PIPE SIZES.

2 P1.1 **FIRST FLOOR PLUMBING SANITARY AND VENT PIPING PLAN**
SCALE: 1/4" = 1'-0"

GRAPHIC SCALE: 1/4" = 1'-0"
0 4' 8' 12' 16'

| SHEET HISTORY SCHEDULE | | |
|---|---|---|
| | | |
| | | |
| | | |
| | | |
| | | |

ISSUE DATE: 10/16/2024 12:02:18 PM

RENOVATION BUILT -OUT

**ZEITLIN'S DELICATESSEN**

| | |
|---|---|
| DRAWN BY: | NYE |
| QAQC: | NYE |
| APPROVED BY: | NYE |
| PROJECT NUMBER: | 2432 |

PLUMBING SANITARY AND VENT PIPING PLAN

**P1.1**

Property of NY Engineers

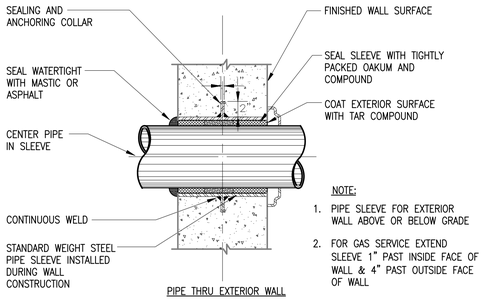


PIPE THRU EXTERIOR WALL

NOTE:

1. PIPE SLEEVE FOR EXTERIOR WALL ABOVE OR BELOW GRADE
2. FOR GAS SERVICE EXTEND SLEEVE 1" PAST INSIDE FACE OF WALL & 4" PAST OUTSIDE FACE OF WALL

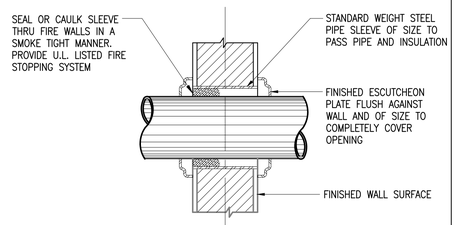


PIPE THRU FIRE RATED WALL OR FLOOR

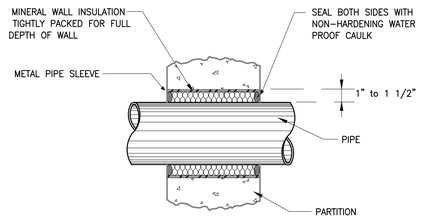


PIPE PENETRATION THRU NON FIRE RATED WALL

1 / P3.0 PIPE SLEEVE THRU WALL SECTION
N.T.S

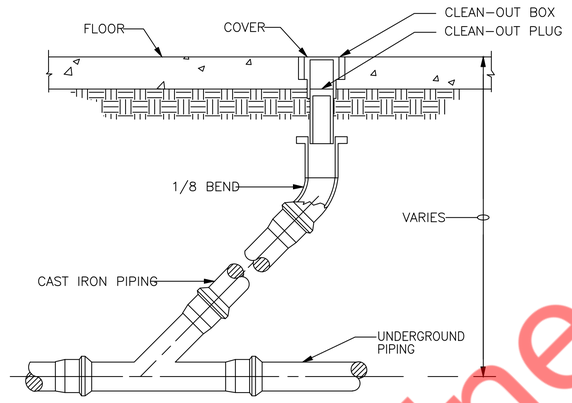


2 / P3.0 FLOOR CLEANOUT DETAIL
N.T.S

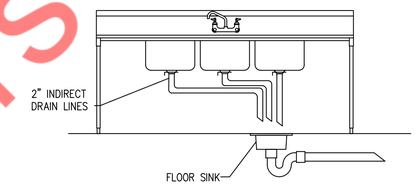


3 / P3.0 3 COMPARTMENT SINK DETAIL
N.T.S

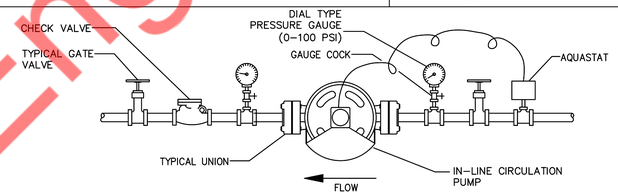


7 / P3.0 INLINE RECIRCULATING PUMP DETAIL
N.T.S

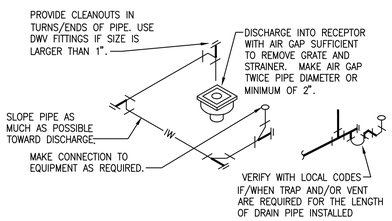


4 / P3.0 INDIRECT WASTE CONNECTION DETAIL
N.T.S

CONCEALED VALVES AND FITTINGS

- WRAP WITH 1-INCH THICK, 1-POUND DENSITY TO REQUIRED PIPE INSULATION THICKNESS
- SECURE WITH WIRE OR TAPE.
- VAPOR SEAL COLD WATER, CHILLED WATER AND STORM WATER PIPING.

CONCEALED VALVES AND FITTINGS

- PREMOLDED FIBER GLASS OR RADIAL MITERED PIPE INSULATION
- SKIM COAT OF INSULATION CEMENT
- COAT OF MASTIC
- WRAP WITH FIBER GLASS REINFORCING CLOTH.
- FINISH COAT OF MASTIC
- OVERLAP 2-INCHES ON PIPE INSULATION.

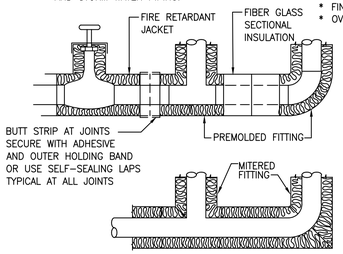

5 / P3.0 INSULATION OF PIPING, VALVES AND FITTINGS FOR EXPOSED AND CONCEALED LOCATIONS
N.T.S

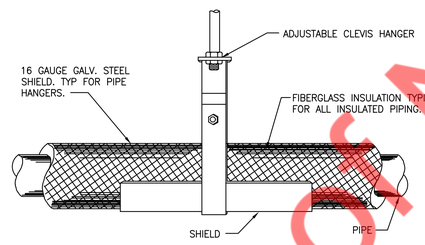


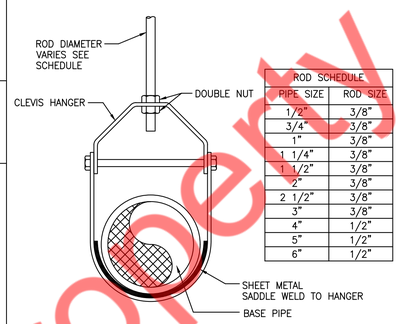


| ROD SCHEDULE | |
|---|---|
| PIPE SIZE | ROD SIZE |
| 1/2" | 3/8" |
| 3/4" | 3/8" |
| 1" | 3/8" |
| 1 1/4" | 3/8" |
| 1 1/2" | 3/8" |
| 2" | 3/8" |
| 2 1/2" | 3/8" |
| 3" | 3/8" |
| 4" | 1/2" |
| 5" | 1/2" |
| 6" | 1/2" |

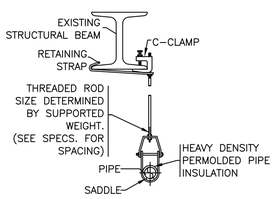


6 / P3.0 HANGER DETAIL
N.T.S

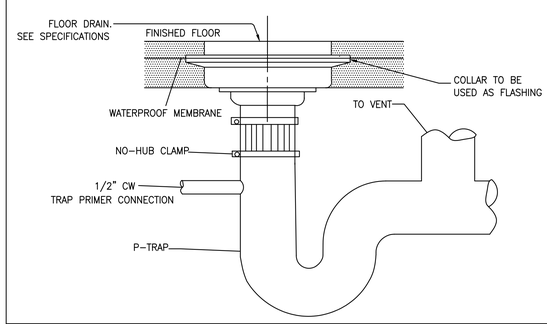


8 / P3.0 FLOOR DRAIN DETAIL
N.T.S

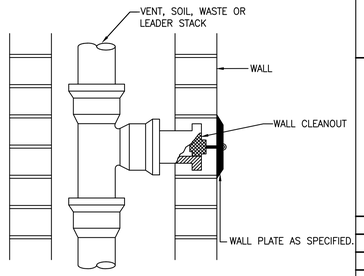


9 / P3.0 WALL CLEANOUT DETAIL
N.T.S

SHEET HISTORY SCHEDULE

| | | |
|---|---|---|
| | | |
| | | |
| | | |
| | | |
| | | |

| | |
|---|---|
| ISSUE DATE: | 10/16/2024 12:02:18 PM |
| DRAWN BY: | NYE |
| QAQC: | NYE |
| APPROVED BY: | NYE |
| PROJECT NUMBER: | 2432 |

RENOVATION BUILT -OUT

ZEITLIN'S DELICATESSEN

PLUMBING DETAILS

P3.0

Property of NY Engineers

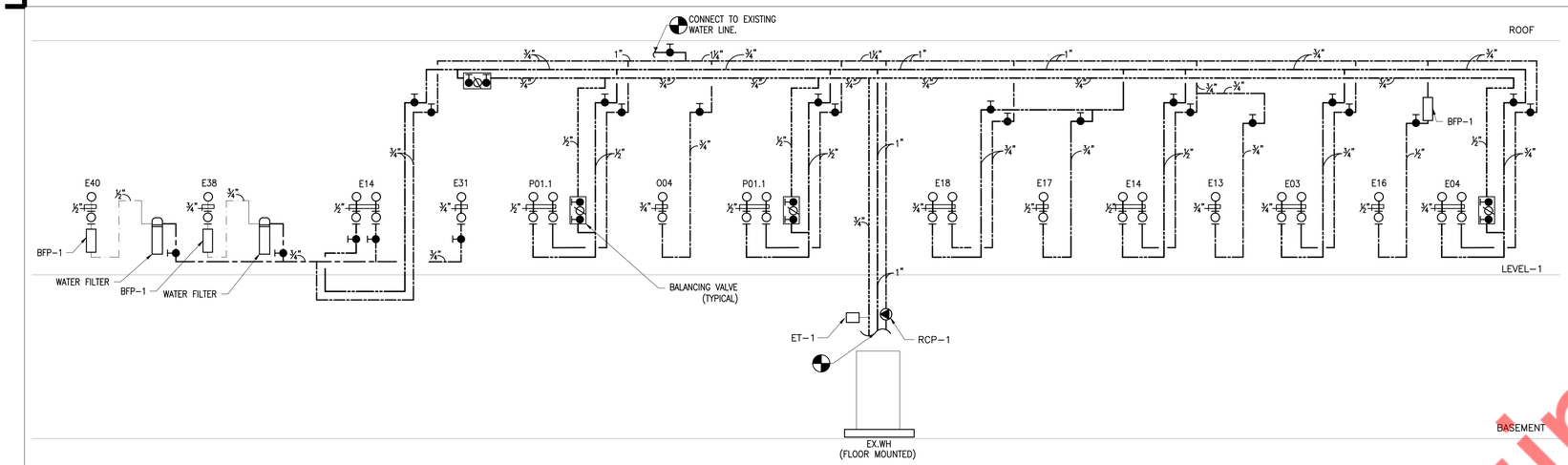


DOMESTIC WATER RISER DIAGRAM
NOT TO SCALE

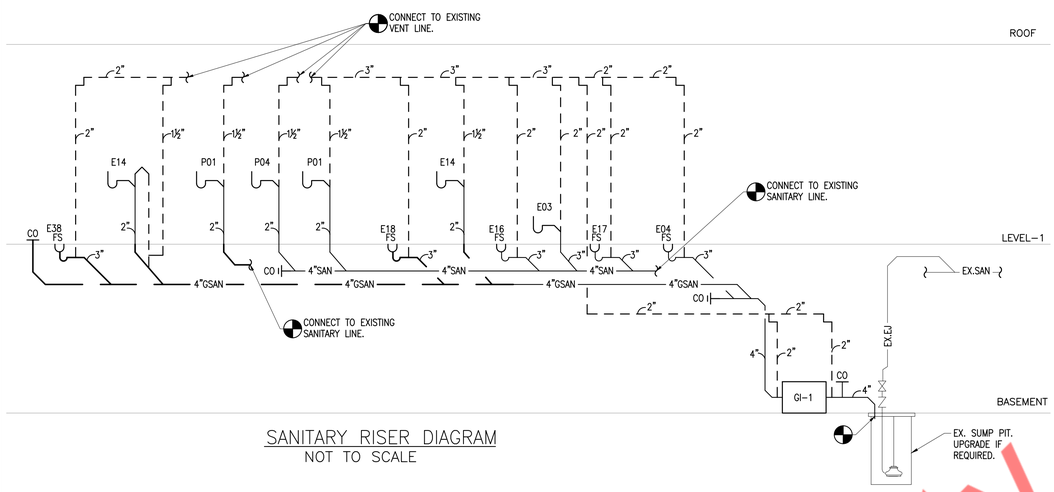


SANITARY RISER DIAGRAM
NOT TO SCALE

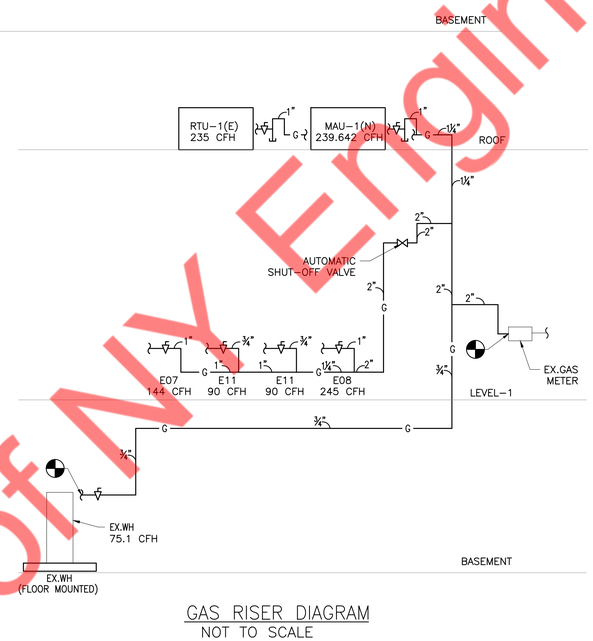


GAS RISER DIAGRAM
NOT TO SCALE

| GAS PIPE SIZING PER INTERNATIONAL FUEL GAS CODE 2000 |
|---|
| INLET PRESSURE– LESS THAN 2 PSI<br>SPECIFIC GRAVITY– 0.6<br>PRESSURE DROP 0.5" WC |
| EQUIVALENT LENGTH OF PIPE =<br>41 + FITTINGS (+40%) = 57.4 FEET |

GAS NOTE:

1. PROVIDE SHUT–OFF VALVE AN ACCESSIBLE LOCATION. PROVIDE GAS PRESSURE REGULATOR FOR ALL GAS EQUIPMENT IF REQUIRED.
2. CONTRACTOR SHALL VERIFY ACTUAL GAS PRESSURE AND LONGEST LENGTH OF RUN TO FARTHEST APPLIANCE PRIOR TO INSTALLATION AND NOTIFY ENGINEER IF CONDITION DIFFER THAN SHOWN ON THIS PLAN.

| ITEM NO. | QTY. | DESCRIPTION | MANUFACTURER | MODEL | SIZE | BTU/HR. |
|---|---|---|---|---|---|---|
| RTU-1(E) | 1 | ROOF TOP UNIT | EXISTING | EXISTING | 1" | 235,000 |
| MAU-1(1) | 1 | MAKE-UP AIR UNIT | ECON-AIR | EA2-D.500-20D | 1" | 239,642 |
| E07 | 1 | TILTING BRAISING PAN, 40 GALLON | GROEN | BPM-40GC | 1" | 144,000 |
| E08 | 1 | 60" RANGE, 6 BURNERS 24" GRIDDLE | BAKEMAX (TVI) | BAS36-24-2 | 1" | 245,000 |
| E11 | 2 | GAS FLOOR FRYER | BAKEMAX (TVI) | BAKEGO40 | 3/4" | 180,000 |
| EX.WH | 1 | EXISTING WATER HEATER | EXISTING | EXISTING | 3/4" | 75,100 |
| | | | | | TOTAL | 1118,742 |

**WATER CALCULATION**

| | | | UNITS PER FIXTURE | | | TOTAL | | |
|---|---|---|---|---|---|---|---|---|
| FIXTURE | QTY. | EQUIPMENT CATEGORY | CW | HW | TOTAL | CW | HW | TOTAL |
| EX.WC | 2 | EXISTING WATER CLOSET | 5 | - | 5 | 10 | - | 10 |
| P01 &01.1 | 2 | LAVATORY & FAUCET | 1.5 | 1.5 | 2 | 3 | 3 | 4 |
| P04 | 1 | URINAL | 5 | - | 5 | 5 | - | 5 |
| E03 & 03.1 | 1 | MOP SINK & FAUCET | 2.25 | 2.25 | 3 | 2.25 | 2.25 | 3 |
| E04 | 1 | 1 COMPARTMENT SINK | 3 | 3 | 4 | 3 | 3 | 4 |
| E13 | 1 | CONVECTION OVEN | 0.5 | - | 0.5 | 0.5 | - | 0.5 |
| E14 | 2 | HAND SINK | 0.75 | 0.75 | 1 | 1.5 | 1.5 | 2 |
| E16 | 1 | ICE MACHINE | 0.5 | - | 0.5 | 0.5 | - | 0.5 |
| E17 | 1 | DISHWASHING MACHINE | - | 2 | 2 | - | 2 | 2 |
| E18 | 1 | 3 COMPARTMENT SINK | 3 | 3 | 4 | 3 | 3 | 4 |
| E31 | 1 | OVEN | 0.5 | - | 0.5 | 0.5 | - | 0.5 |
| E38 | 1 | ESPRESSO MACHINE | 0.5 | - | 0.5 | 0.5 | - | 0.5 |
| E40 | 1 | COFFEE MACHINE | 0.5 | - | 0.5 | 0.5 | - | 0.5 |
| | | | | | TOTAL FIXTURE UNITS | 30.25 | 14.75 | 36.5 |
| | | | | | | TOTAL FIXTURE UNITS -36.5 = 24.3GPM | | |
| WSFU VALUES AS PER CHICAGO PLUMBING CODE SECTION 18-29. TABLE 18-29 10.2 PART-1 | | | | | | | | |
| FOR 24.3 GPM CALCULATED PIPE SIZE IS 1¼" | | | | | | | | |

**GREASE INTERCEPTOR SIZING**

| FIXTURE | QTY | DIMENSIONS | | | VOLUME | | %USAGE | GPM | GPM |
|---|---|---|---|---|---|---|---|---|---|
| | | LENGTH | WIDTH | DEPTH | CU.IN | GALLONS | | 1 MIN | 2 MIN |
| 3 COMPARTMENT-CORNER SINK | 01 | 24 | 18 | 14 | 12096 | 52.36 | 0.75 | 39.28 | 19.64 |
| 1 COMP SINK | 01 | 24 | 24 | 14 | 8064 | 34.91 | 0.75 | 26.18 | 13.09 |
| HAND SINK | 01 | 18 | 24 | 14 | 6048 | 26.18 | 0.75 | 19.64 | 9.82 |
| HAND SINK | 02 | 10 | 14 | 5 | 1400 | 6.06 | 0.75 | 4.54 | 2.28 |
| FLOOR SINK | 01 | - | - | - | - | - | - | 3 | 3 |
| | | | | | | | TOTAL GPM | 92.64 | 47.83 |
| AS PER PDI-G101, PROPOSED GREASE INTERCEPTOR MODEL SCHIER-GB-75 | | | | | | | | | |

**GREASE INTERCEPTOR SCHEDULE**

| ITEM | SERVICE | FLOW CAPACITY (GPM) | GREASE CAPACITY (LBS) | LIQUID CAPACITY (GALLON) | MANUFACTURER AND MODEL |
|---|---|---|---|---|---|
| GREASE INTERCEPTOR GI-1 | KITCHEN WASTE | 75 | 861 | 125 | SCHIER MODEL GB-75 |
| NOTE- CONTRACTOR TO PROVIDE ALL REQUIRED ACCESSORIES FOR SATISFACTORY WORKING OF GREASE INTERCEPTOR AS PER SITE CONDITIONS. | | | | | |

**PLUMBING FIXTURE SCHEDULE**

| FIXTURE | QTY. | EQUIPMENT CATEGORY | MANUFACTURER | MODEL | TRAP | SOIL/WASTE | | VENT | CW | HW | THERMOSTATIC MIXING VALVE | REMARKS |
|---|---|---|---|---|---|---|---|---|---|---|---|---|
| | | | | | | DIRECT | INDIRECT | | | | | |
| EX.WC | 2 | WATER CLOSET | EXISTING | EXISTING | - | E | - | E | E | - | - | FLUSH TANK |
| P01 | 2 | LAVATORY | AMERICAN STANDARD | 9024901EC.020 | 1-1/2" | 1-1/2" | - | 1-1/2" | - | - | - | P-TRAP |
| P01.1 | 2 | LAVATORY FAUCET | AMERICAN STANDARD | 1340.109 | - | - | - | - | 1/2" | 1/2" | PROVIDE | - |
| P04 | 1 | URINAL | - | - | 2" | 2" | - | 1-1/2" | 3/4" | - | - | P-TRAP |
| E03 | 1 | MOP SINK | SPG INTERNATIONAL | MOP-20-8 | 3" | 3" | - | 2" | - | - | - | - |
| E03.1 | 1 | MOP SINK FAUCET | SERV-WARE | SF1000 | - | - | - | - | 3/4" | 3/4" | - | - |
| E04 | 1 | 1 COM SINK | JOHN BOOS | 1B18244-2D24 | 2" | - | 2" | - | 3/4" | 3/4" | - | INDIRECT DRAIN TO FLOOR SINK |
| E13 | 1 | CONVECTION OVEN ELECTRIC | MOFFAT | E32D5 | - | - | - | - | 3/4" | - | - | - |
| E14 | 2 | HAND SINK | BK RESOURCES | APHS-W1410-1SSFA | 1-1/2" | 2" | - | 1-1/2" | 1/2" | 1/2" | PROVIDE | P-TRAP |
| E16 | 1 | ICE MACHINE | HOSHIZAKI AMERICA, INC. | EI-KM520M | - | - | 1/2" | - | 1/2" | - | - | INDIRECT DRAIN TO FLOOR SINK |
| E17 | 1 | DISHWASHING MACHINE | HOBART | CUH-1 | - | - | 1" | - | - | 3/4" | - | INDIRECT DRAIN TO FLOOR SINK |
| E18 | 1 | CORNER SINK, 3 COMPARTMENT | JOHN BOOS | 3PBCS18244-2D24 | - | - | 2" | - | 3/4" | 3/4" | - | INDIRECT DRAIN TO FLOOR SINK |
| E31 | 1 | OVEN, DECK, COUNTER TOP, ELECTRIC | PIZZA MASTER | PM 451ED | - | - | - | - | 3/4" | - | - | - |
| E38 | 1 | ESPRESSO CAPPUCCINO MACHINE | RANCILIO GROUP | CLASSE 5 USB 2GR | - | - | 2" | - | 3/4" | - | - | WATER ENTERING THE MACHINE SHOULD HAVE A WATER HARDNESS LEVEL OF 2-3 GPG AT ALL TIMES. |
| E40 | 1 | COFFEE MACHINE | FETCO | CBS-1221-PLUS | - | - | - | - | 1/4" | - | - | IN-LINE WATER FILTRATION SYSTEM |

**RECIRCULATING PUMP SCHEDULE**

| ITEM | QUANTITY | GPM | TOTAL HEAD(FT) | MOTOR HP | MANUFACTURER & MODEL NO | REMARK |
|---|---|---|---|---|---|---|
| RCP-1 | 1 | 2 | 10 | 0.03 | GRUNDFOS UP 15-10 B5 | PROVIDE AQUASTAT AND TIMER KIT FOR CONTROL |

**EXPANSION TANK SCHEDULE**

| TAG | LOCATION | SERVICE | TANK CAPACITY (GALLONS) | MANUFACTURER & MODEL | DIMENSION (DIA X HEIGHT) | NO. OF EXPANSION TANK |
|---|---|---|---|---|---|---|
| ET-1 | REFER FLOOR PLANS | HW | 4.4 | THERM-X-TROL ST-12 | 11"X15" | 1 |

**SHEET HISTORY SCHEDULE**

| | | |
|---|---|---|
| | | |
| | | |
| | | |
| | | |
| | | |

ISSUE DATE: 10/16/2024 12:02:18 PM

**RENOVATION BUILT -OUT**

**ZEITLIN'S DELICATESSEN**

DRAWN BY: NYE
QAQC: NYE
APPROVED BY: NYE
PROJECT NUMBER: 2432

**PLUMBING RISERS AND SCHEDULES**

**P4.0**

Property of NY Engineers